2026 Ninja 500

PARTS DIAGRAM

Balancer

E1323

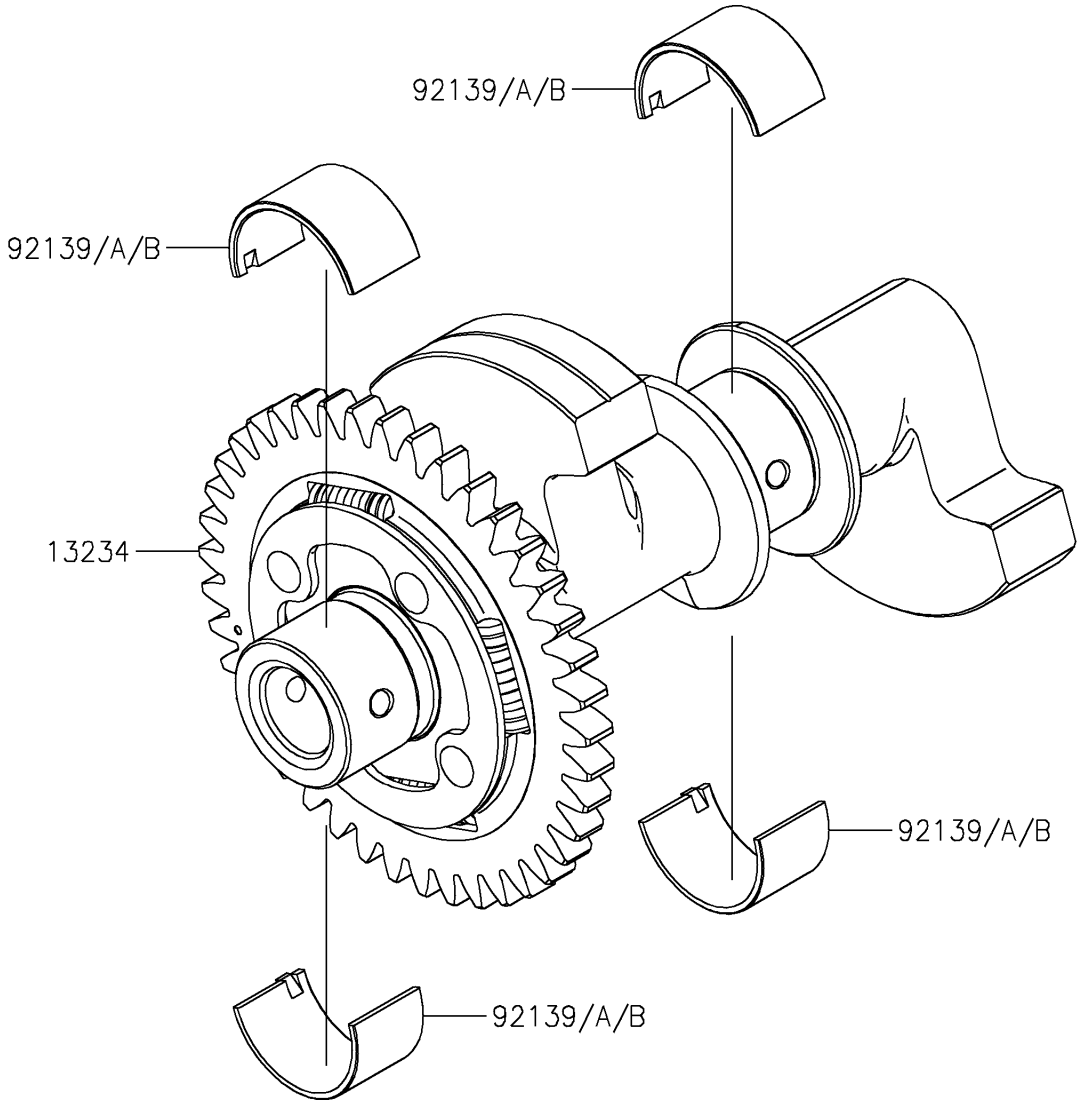

© 2026 Kawasaki Motors Corp., U.S.A.

2026 Ninja 500

PARTS LIST

Balancer

ITEM NAME	PART NUMBER	QUANTITY
SHAFT-COMP,BALANCER (Ref # 13234)	13234-0627	1
BUSHING,BALANCER,BLUE (Ref # 92139)	92139-0883	AR
BUSHING,BALANCER,BLACK (Ref # 92139A)	92139-0884	4
BUSHING,BALANCER,BROWN (Ref # 92139B)	92139-0885	AR

© 2026 Kawasaki Motors Corp., U.S.A.