2026 KLX®230SM ABS

PARTS DIAGRAM

Engine Mount

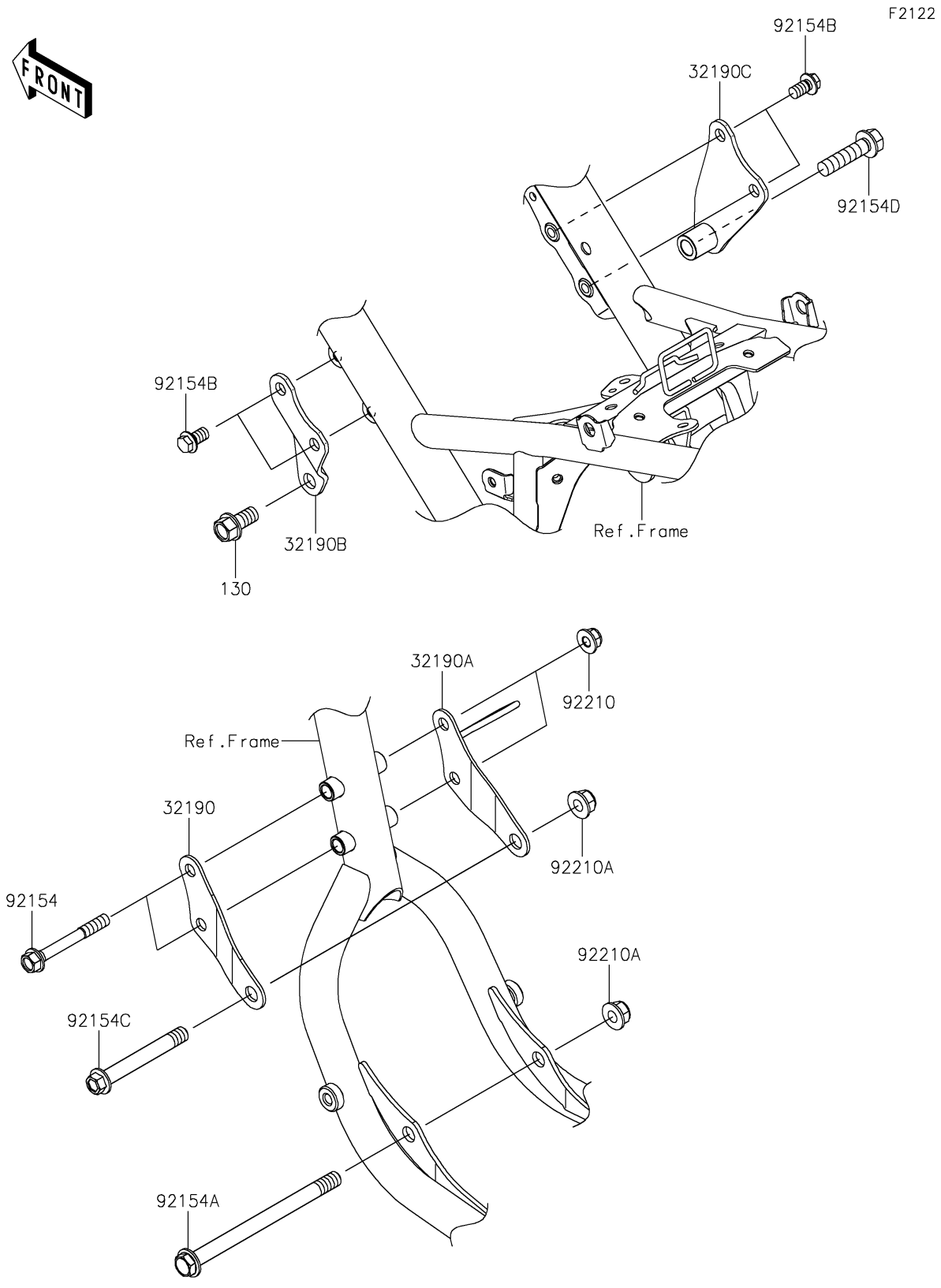

© 2026 Kawasaki Motors Corp., U.S.A.

2026 KLX®230SM ABS

PARTS LIST

Engine Mount

ITEM NAME	PART NUMBER	QUANTITY
BRACKET-ENGINE,FR,LH (Ref # 32190)	32190-0872	1
BRACKET-ENGINE,FR,RH (Ref # 32190A)	32190-0873	1
BRACKET-ENGINE,HEAD,LH (Ref # 32190B)	32190-0874	1
BRACKET-ENGINE,HEAD,RH (Ref # 32190C)	32190-0875	1
BOLT,FLANGED,8X65 (Ref # 92154)	92154-3896	2
BOLT,FLANGED,10X137 (Ref # 92154A)	92154-3897	1
BOLT,FLANGED,8X14 (Ref # 92154B)	92154-3913	4
BOLT,FLANGED,10X77 (Ref # 92154C)	92154-4041	1
BOLT,FLANGED,10X40 (Ref # 92154D)	92154-7284	1
NUT,8MM (Ref # 92210)	92210-0570	2
NUT,LOCK,FLANGED,10MM (Ref # 92210A)	92210-1080	2
BOLT-FLANGED,10X20 (Ref # 130)	130CA1020	1

© 2026 Kawasaki Motors Corp., U.S.A.