2026 KLX®230SM ABS

PARTS DIAGRAM

Throttle

E1510

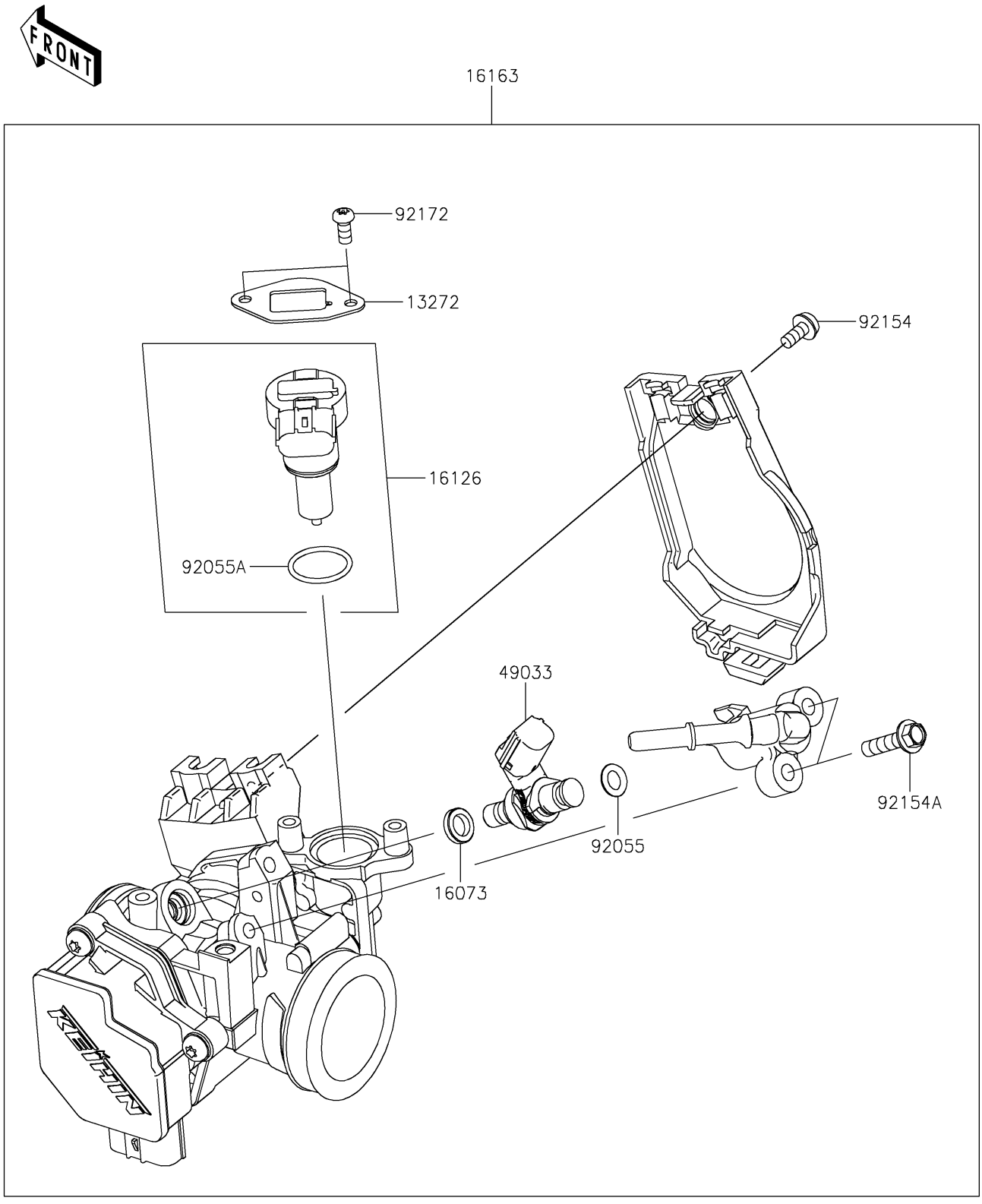

© 2026 Kawasaki Motors Corp., U.S.A.

2026 KLX®230SM ABS

PARTS LIST

Throttle

ITEM NAME	PART NUMBER	QUANTITY
PLATE (Ref # 13272)	13272-1862	1
INSULATOR (Ref # 16073)	16073-0821	1
VALVE,ISC (Ref # 16126)	16126-0729	1
THROTTLE-ASSY (Ref # 16163)	16163-0951	1
NOZZLE-INJECTION (Ref # 49033)	49033-0031	1
RING-O,6.3X2.2 (Ref # 92055)	92055-0821	1
RING-O (Ref # 92055A)	92055-0826	1
BOLT (Ref # 92154)	92154-0133	1
BOLT,FLANGED,5X20 (Ref # 92154A)	92154-1559	2
SCREW,TORX (Ref # 92172)	92172-0903	2

© 2026 Kawasaki Motors Corp., U.S.A.