2026 Z125 PRO

PARTS DIAGRAM

Seat

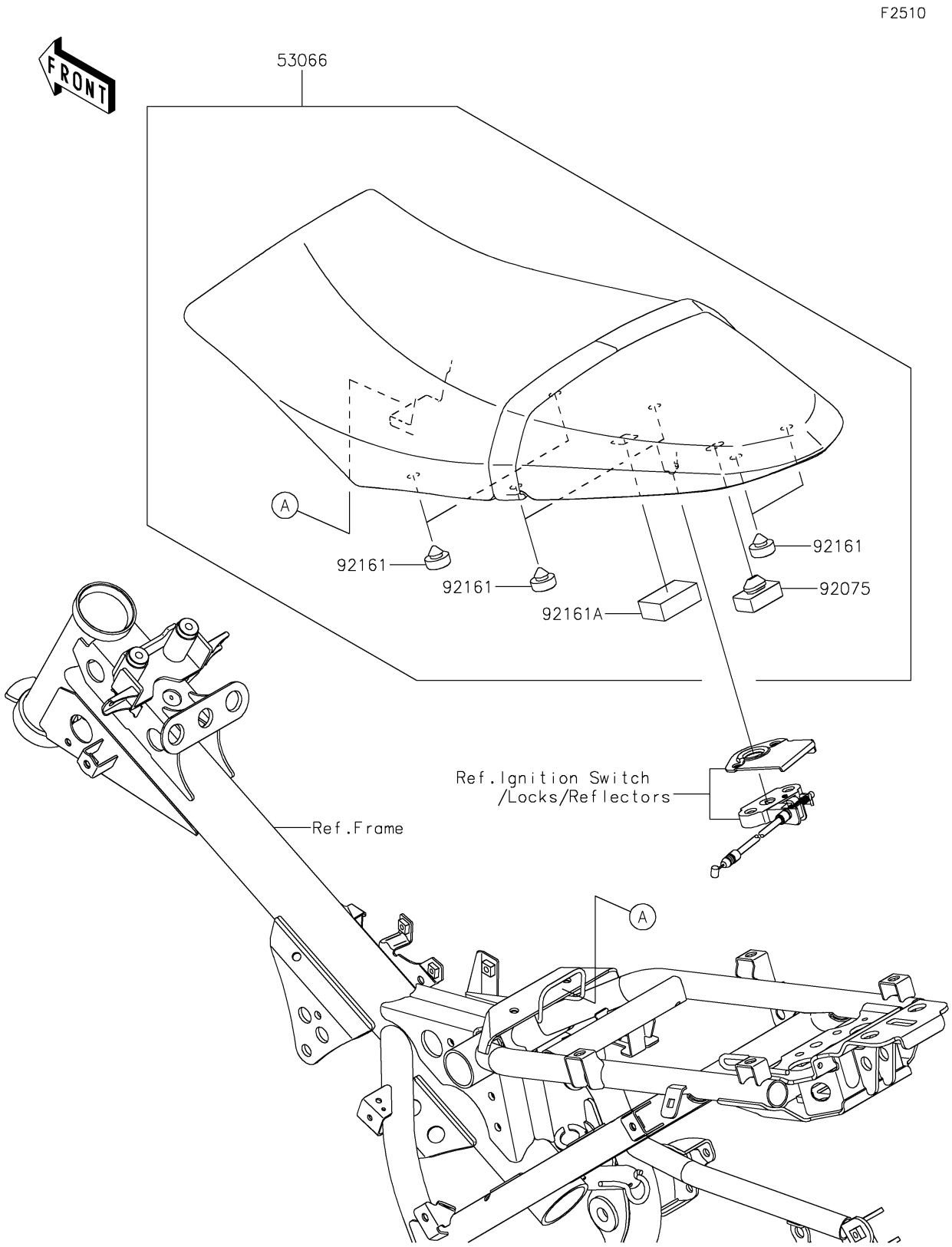

© 2026 Kawasaki Motors Corp., U.S.A.

2026 Z125 PRO

PARTS LIST

Seat

ITEM NAME	PART NUMBER	QUANTITY
SEAT-ASSY,BLACK+BLK (Ref # 53066)	53066-0529-12Y	1
DAMPER (Ref # 92075)	92075-099	1
DAMPER,10X20X8 (Ref # 92161)	92161-0855	6
DAMPER,27X42X15 (Ref # 92161A)	92161-1866	1

© 2026 Kawasaki Motors Corp., U.S.A.