2026 Z125 PRO

PARTS DIAGRAM

Starter Motor

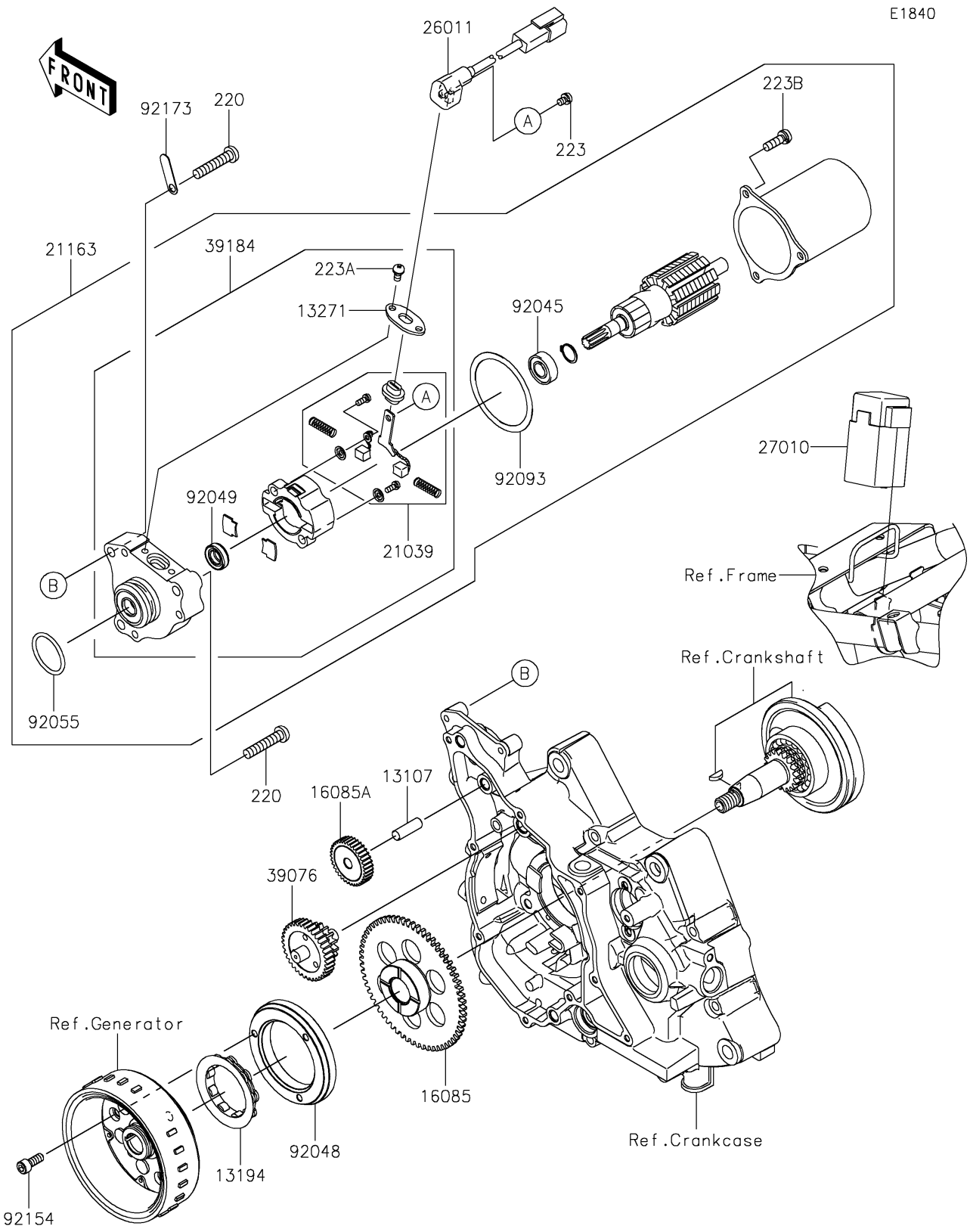

© 2026 Kawasaki Motors Corp., U.S.A.

2026 Z125 PRO

PARTS LIST

Starter Motor

ITEM NAME	PART NUMBER	QUANTITY
SHAFT,8X25 (Ref # 13107)	13107-1142	1
CLUTCH-ONEWAY (Ref # 13194)	13194-0019	1
PLATE (Ref # 13271)	13271-0674	1
GEAR,62T (Ref # 16085)	16085-0659	1
GEAR,IDLE,45T (Ref # 16085A)	16085-0663	1
BRUSH,STARTER MOTOR(SET) (Ref # 21039)	21039-1067	1
STARTER-ELECTRIC (Ref # 21163)	21163-0777	1
WIRE-LEAD (Ref # 26011)	26011-0055	1
SWITCH (Ref # 27010)	27010-0085	1
LIMITER (Ref # 39076)	39076-0022	1
BRACKET-ASSY (Ref # 39184)	39184-0014	1
BEARING-BALL,STARTER MOTOR (Ref # 92045)	92045-1349	1
RACE (Ref # 92048)	92048-0023	1
SEAL-OIL,STARTER MOTOR (Ref # 92049)	92049-1465	1
RING-O (Ref # 92055)	92055-1276	1
SEAL,STARTER MOTOR (Ref # 92093)	92093-1079	1
BOLT,SOCKET,6X16 (Ref # 92154)	92154-0235	3
CLAMP (Ref # 92173)	92173-1585	1
SCREW-PAN-CROS,6X30 (Ref # 220)	220AD0630	3
SCREW-PAN-WS-CROS,4X6 (Ref # 223)	223AA0406	1
SCREW-PAN-WS-CROS,4X8 (Ref # 223A)	223AA0408	2
SCREW-PAN-WS-CROS,5X16 (Ref # 223B)	223AA0516	3

© 2026 Kawasaki Motors Corp., U.S.A.