2026 Z125 PRO

PARTS DIAGRAM

Fuel Evaporative System(CA)

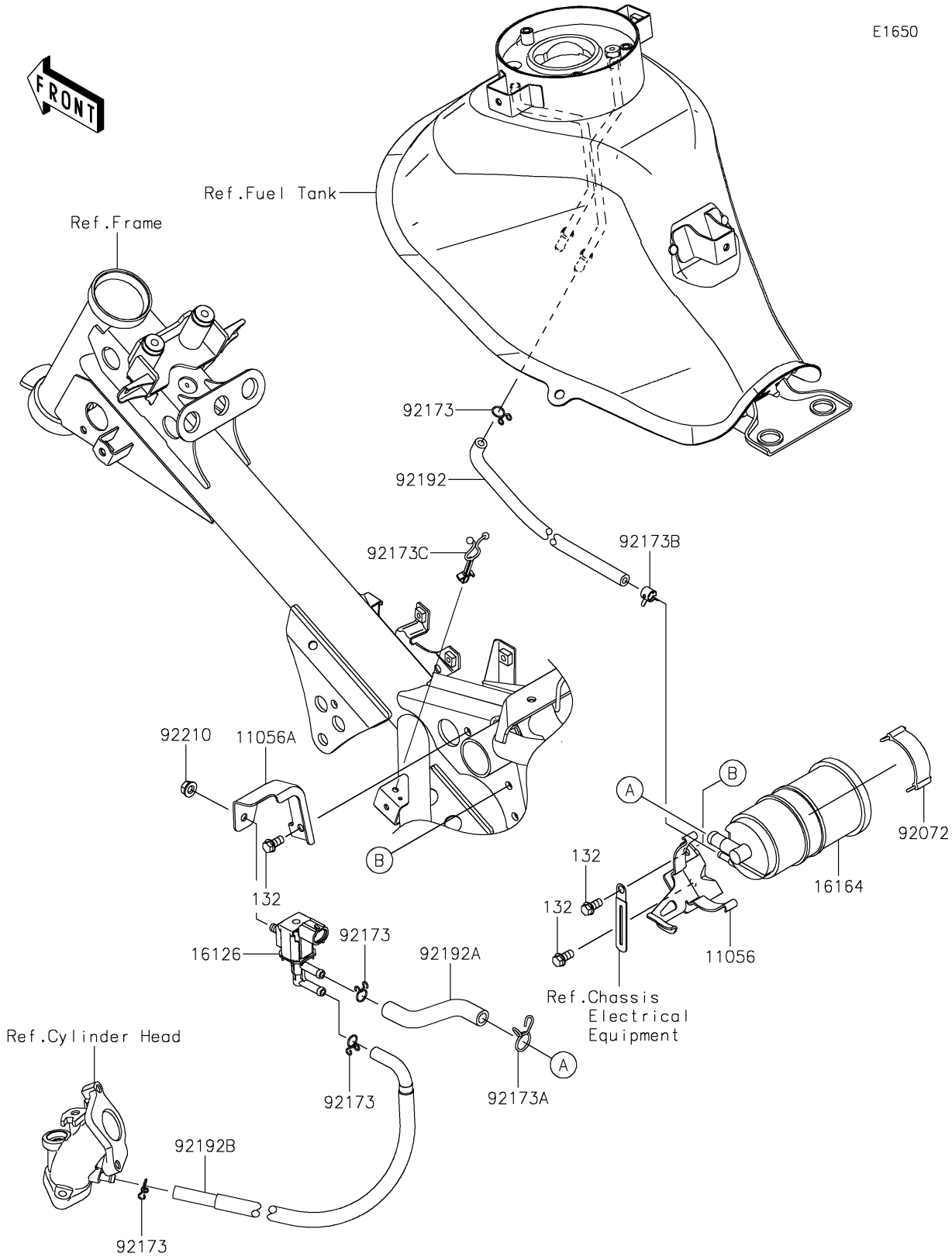

© 2026 Kawasaki Motors Corp., U.S.A.

2026 Z125 PRO

PARTS LIST

Fuel Evaporative System(CA)

ITEM NAME	PART NUMBER	QUANTITY
BRACKET,CANISTER (Ref # 11056)	11056-7523	1
BRACKET,VALVE (Ref # 11056A)	11056-7743	1
VALVE,SOLENOID (Ref # 16126)	16126-0705	1
CANISTER (Ref # 16164)	16164-0704	1
BAND,L=50 (Ref # 92072)	92072-1419	1
CLAMP (Ref # 92173)	92173-0050	4
CLAMP,14MM (Ref # 92173A)	92173-1015	1
CLAMP (Ref # 92173B)	92173-1143	1
CLAMP (Ref # 92173C)	92173-1616	1
TUBE,TANK-CANISTER (Ref # 92192)	92192-1484	1
TUBE,CANISTER-VALVE (Ref # 92192A)	92192-1531	1
TUBE,VALVE-PIPE INTAKE (Ref # 92192B)	92192-1747	1
NUT,FLANGED,6MM (Ref # 92210)	92210-1514	1
BOLT-FLANGED-SMALL,6X12 (Ref # 132)	132BA0612	3

© 2026 Kawasaki Motors Corp., U.S.A.