2026 Z125 PRO

PARTS DIAGRAM

Throttle

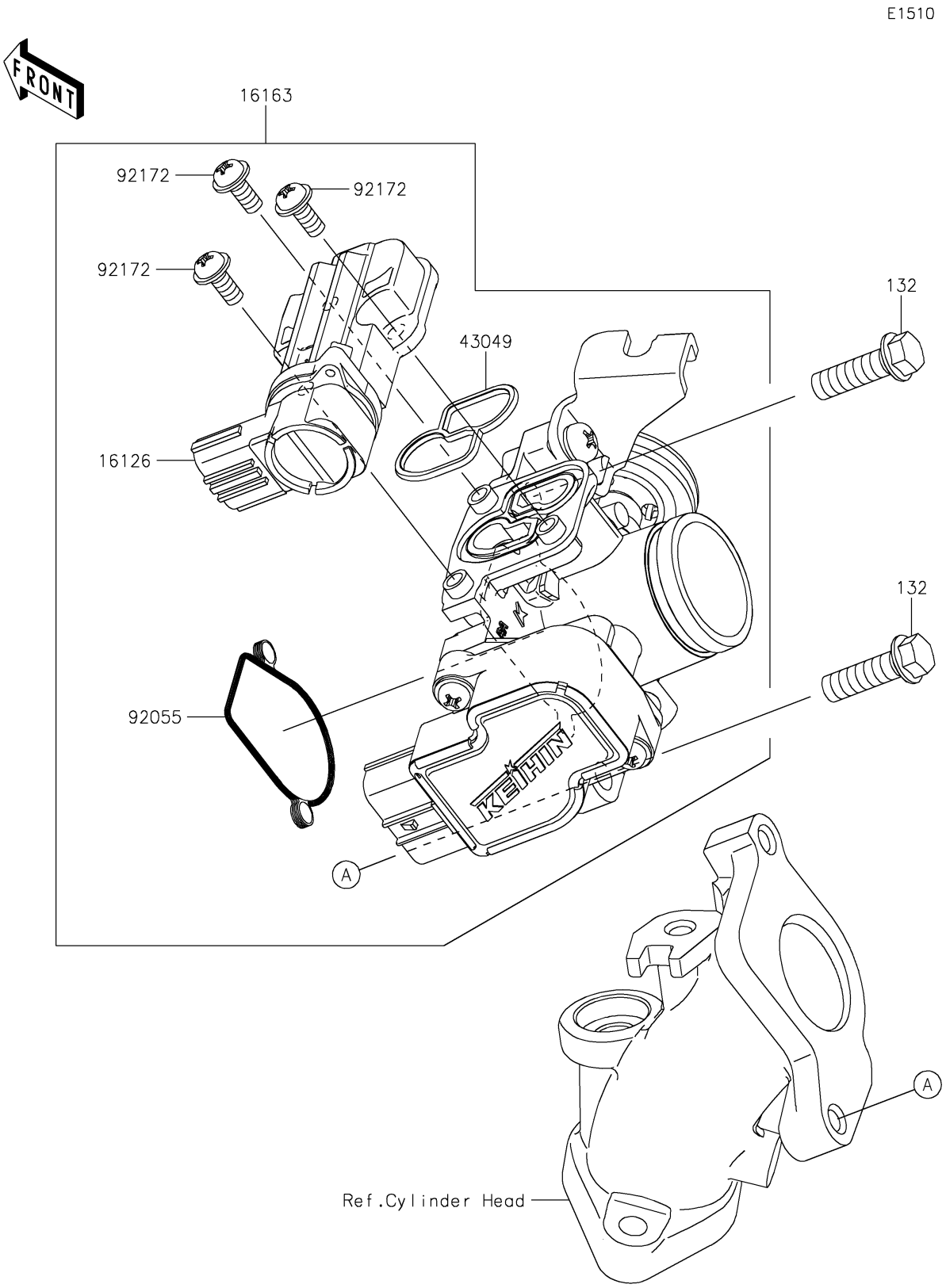

© 2026 Kawasaki Motors Corp., U.S.A.

2026 Z125 PRO

PARTS LIST

Throttle

ITEM NAME	PART NUMBER	QUANTITY
VALVE,ISC (Ref # 16126)	16126-0757	1
THROTTLE-ASSY (Ref # 16163)	16163-1186	1
PACKING (Ref # 43049)	43049-0561	1
RING-O (Ref # 92055)	92055-0879	1
SCREW (Ref # 92172)	92172-1136	3
BOLT-FLANGED-SMALL,6X20 (Ref # 132)	132BA0620	2

© 2026 Kawasaki Motors Corp., U.S.A.