2026 Z125 PRO

PARTS DIAGRAM

Engine Cover(s)

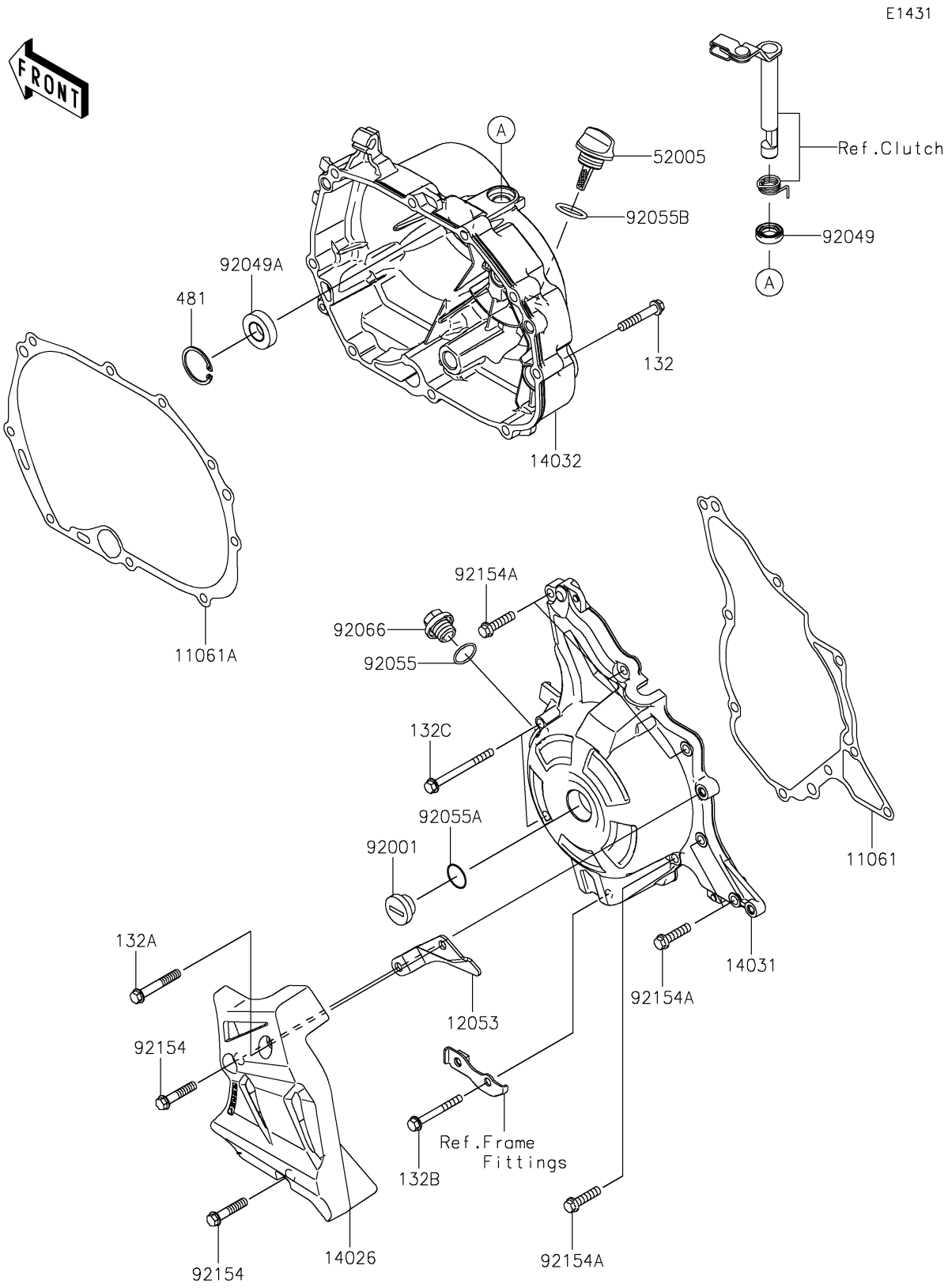

© 2026 Kawasaki Motors Corp., U.S.A.

2026 Z125 PRO

PARTS LIST

Engine Cover(s)

Kawasaki
Let the Good Times Roll®

ITEM NAME	PART NUMBER	QUANTITY
GASKET,GENERATOR (Ref # 11061)	11061-0125	1
GASKET,CLUTCH COVER (Ref # 11061A)	11061-0289	1
GUIDE-CHAIN (Ref # 12053)	12053-0233	1
COVER-CHAIN (Ref # 14026)	14026-0127	1
COVER-GENERATOR,F.M.GRAY (Ref # 14031)	14031-0575-26M	1
COVER-CLUTCH,F.M.GRAY (Ref # 14032)	14032-0634-26M	1
GAUGE,OIL LEVEL (Ref # 52005)	52005-0756	1
BOLT,GENERATOR COVER CAP (Ref # 92001)	92001-1827	1
SEAL-OIL,12X20X5.5 (Ref # 92049)	92049-0142	1
SEAL-OIL,AC0387E0 (Ref # 92049A)	92049-1595	1
RING-O,14.8X2.4 (Ref # 92055)	92055-0153	1
RING-O,25.7X2.4 (Ref # 92055A)	92055-0154	1
RING-O,20X2 (Ref # 92055B)	92055-0155	1
PLUG,14X10 (Ref # 92066)	92066-1571	1
BOLT,FLANGED,6X30 (Ref # 92154)	92154-1080	2
BOLT,FLANGED,6X25 (Ref # 92154A)	92154-2154	6
BOLT-FLANGED-SMALL,6X35 (Ref # 132)	132BA0635	9
BOLT-FLANGED-SMALL,6X40 (Ref # 132A)	132BA0640	1
BOLT-FLANGED-SMALL,6X45 (Ref # 132B)	132BA0645	1
BOLT-FLANGED-SMALL,6X60 (Ref # 132C)	132BA0660	2
CIRCLIP-TYPE-C,28MM (Ref # 481)	481J2800	1

© 2026 Kawasaki Motors Corp., U.S.A.