2026 Z125 PRO

PARTS DIAGRAM

Muffler(s)

Kawasaki
Let the Good Times Roll®

E1140

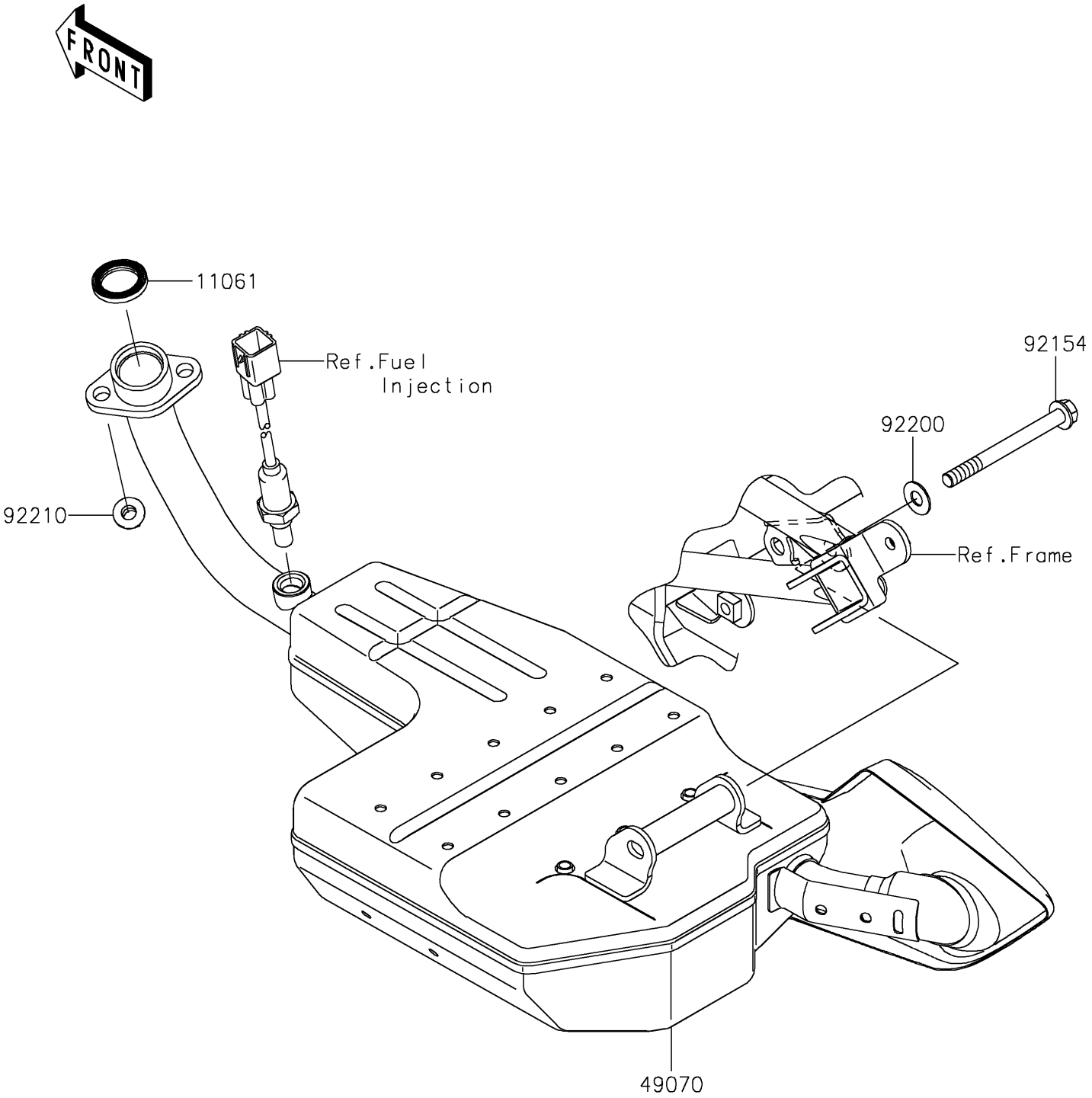

© 2026 Kawasaki Motors Corp., U.S.A.

2026 Z125 PRO

PARTS LIST

Muffler(s)

ITEM NAME	PART NUMBER	QUANTITY
GASKET,EXHAUST PIPE (Ref # 11061)	11061-1112	1
MUFFLER-COMP (Ref # 49070)	49070-0875	1
BOLT,FLANGED,8X85 (Ref # 92154)	92154-1770	1
WASHER,8.5X19X1 (Ref # 92200)	92200-1733	1
NUT,FLANGED,8MM (Ref # 92210)	92210-0304	2

© 2026 Kawasaki Motors Corp., U.S.A.