2026 Z125 PRO

PARTS DIAGRAM

Cylinder Head

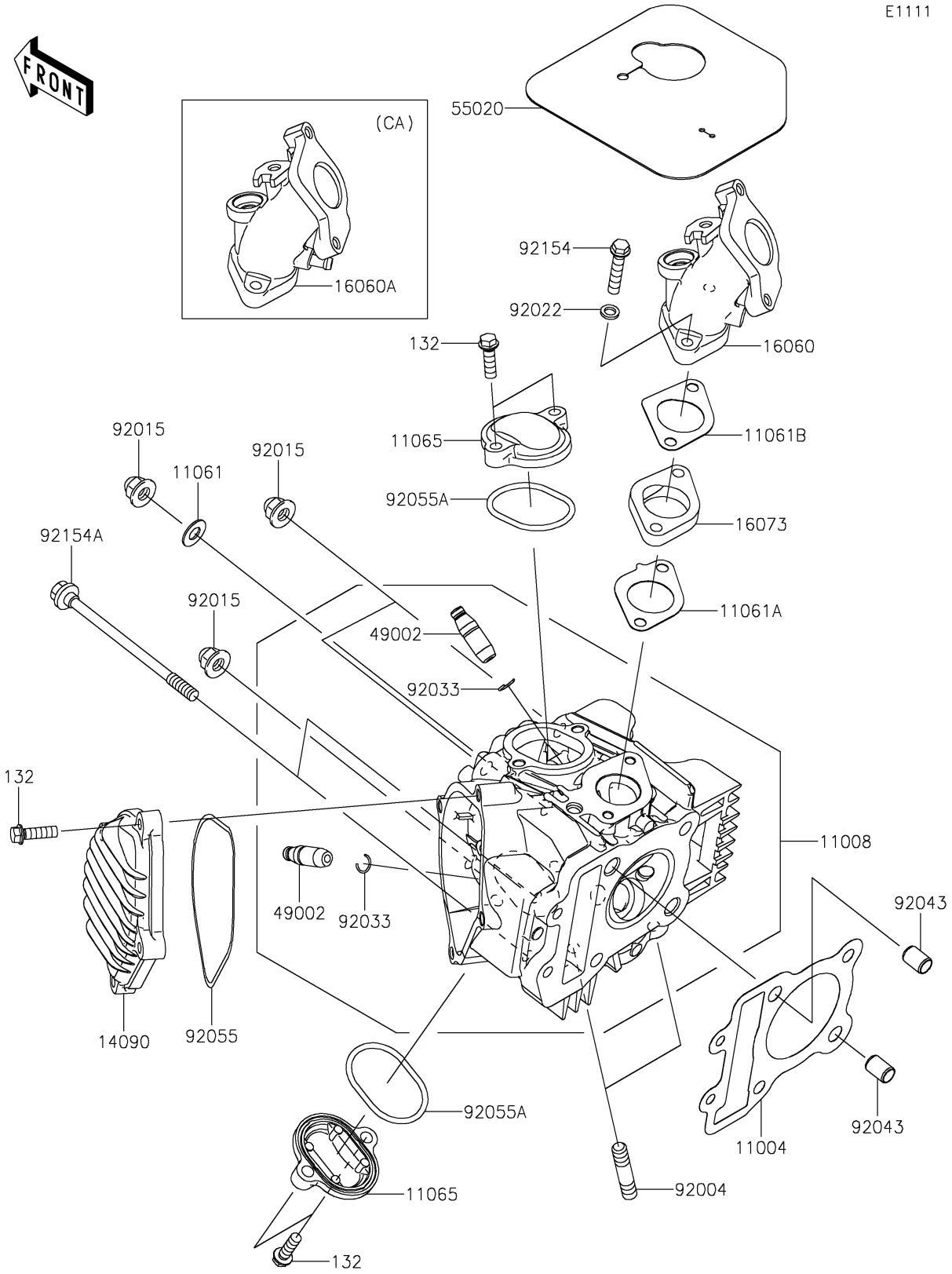

© 2026 Kawasaki Motors Corp., U.S.A.

2026 Z125 PRO

PARTS LIST

Cylinder Head

ITEM NAME	PART NUMBER	QUANTITY
GASKET-HEAD (Ref # 11004)	11004-0009	1
HEAD-COMP-CYLINDER (Ref # 11008)	11008-0868	1
GASKET (Ref # 11061)	11061-0850	1
GASKET,HEAD SIDE (Ref # 11061A)	11061-0992	1
GASKET,PIPE-INTAKE SIDE (Ref # 11061B)	11061-0993	1
CAP,VALVE ADJUSTING (Ref # 11065)	11065-0919	2
COVER,CAMSHAFT (Ref # 14090)	14090-1845	1
PIPE-INTAKE (Ref # 16060)	16060-0040	1
PIPE-INTAKE (Ref # 16060A)	16060-0041	1
INSULATOR (Ref # 16073)	16073-0858	1
GUIDE-VALVE (Ref # 49002)	49002-0033	2
GUARD,THROTTLE-ASSY (Ref # 55020)	55020-1958	1
STUD,8X28.5 (Ref # 92004)	92004-1284	2
NUT,CAP,8MM (Ref # 92015)	92015-1151	4
WASHER,6.3X10.2X1.6 (Ref # 92022)	92022-1588	2
RING-SNAP (Ref # 92033)	92033-1247	2
PIN,8.2X10X14 (Ref # 92043)	92043-1264	2
RING-O,91X2.5 (Ref # 92055)	92055-1651	1
RING-O,ADJUST CAP (Ref # 92055A)	92055-1655	2
BOLT,FLANGED,6X30 (Ref # 92154)	92154-1830	2
BOLT,6X106 (Ref # 92154A)	92154-2693	2
BOLT-FLANGED-SMALL,6X20 (Ref # 132)	132BA0620	8

© 2026 Kawasaki Motors Corp., U.S.A.