2024 Vulcan 900 Custom

PARTS DIAGRAM

Swingarm

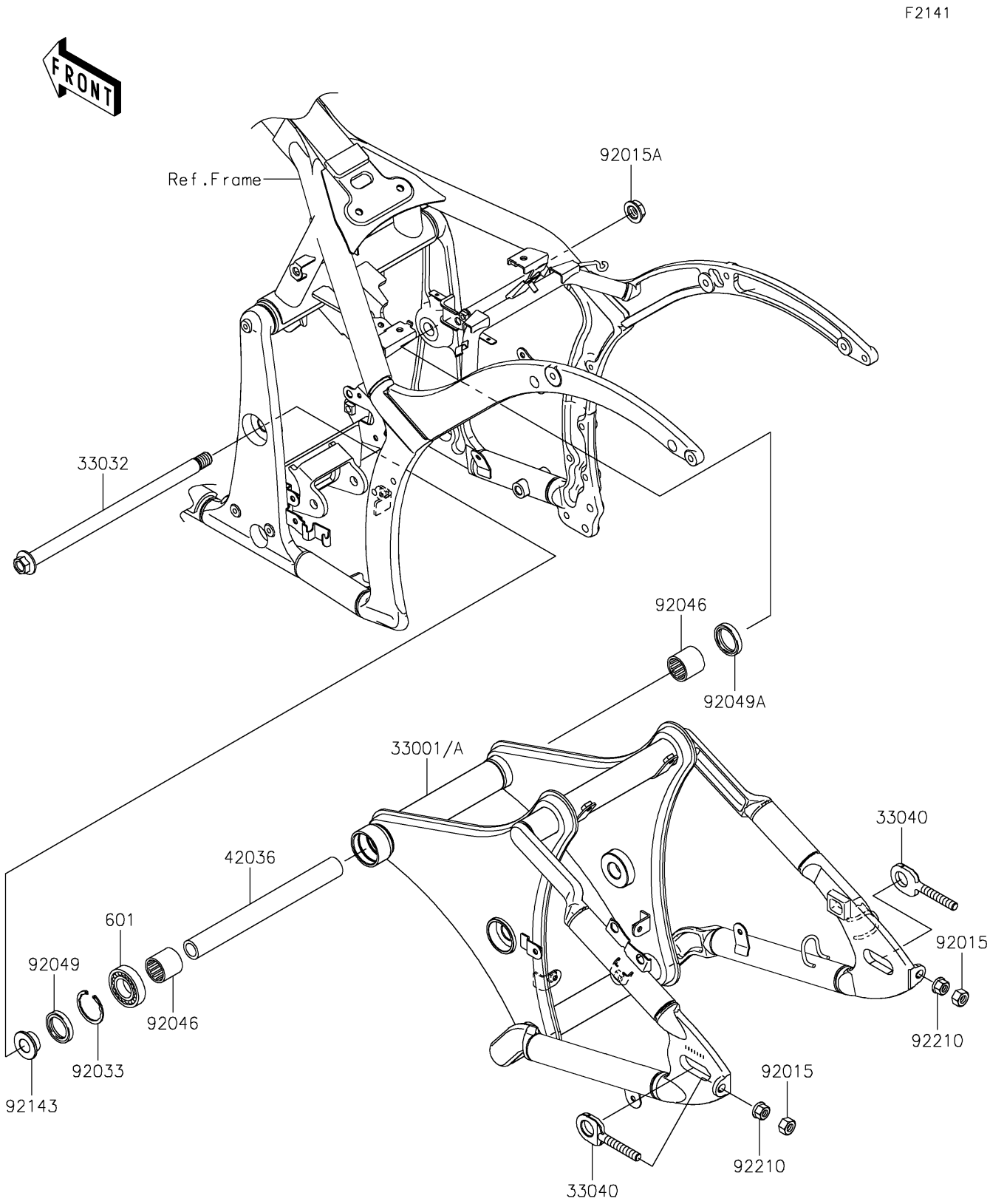

© 2026 Kawasaki Motors Corp., U.S.A.

2024 Vulcan 900 Custom

PARTS LIST

Swingarm

ITEM NAME	PART NUMBER	QUANTITY
ARM-COMP-SWING,F.M.GRAY (Ref # 33001A)	33001-0226-26M	1
SHAFT-SWING ARM (Ref # 33032)	33032-0018	1
ADJUSTER-CHAIN (Ref # 33040)	33040-0005	2
SLEEVE,SWING ARM,L=246 (Ref # 42036)	42036-0031	1
NUT,LOCK,10MM (Ref # 92015)	92015-1494	2
NUT,FLANGED,16MM (Ref # 92015A)	92015-1946	1
RING-SNAP,40MM (Ref # 92033)	92033-1040	1
BEARING-NEEDLE,BHTM2530-1 (Ref # 92046)	92046-1035	2
SEAL-OIL (Ref # 92049)	92049-1047	1
SEAL-OIL,MH25334 (Ref # 92049A)	92049-1060	1
COLLAR,RR AXLE,L=14 (Ref # 92143)	92143-1188	1
NUT,FLANGED,10MM (Ref # 92210)	92210-0349	2
BEARING-BALL,#6203 (Ref # 601)	601A6203	1

© 2026 Kawasaki Motors Corp., U.S.A.