2024 Vulcan 900 Custom

PARTS DIAGRAM

Gear Change Mechanism

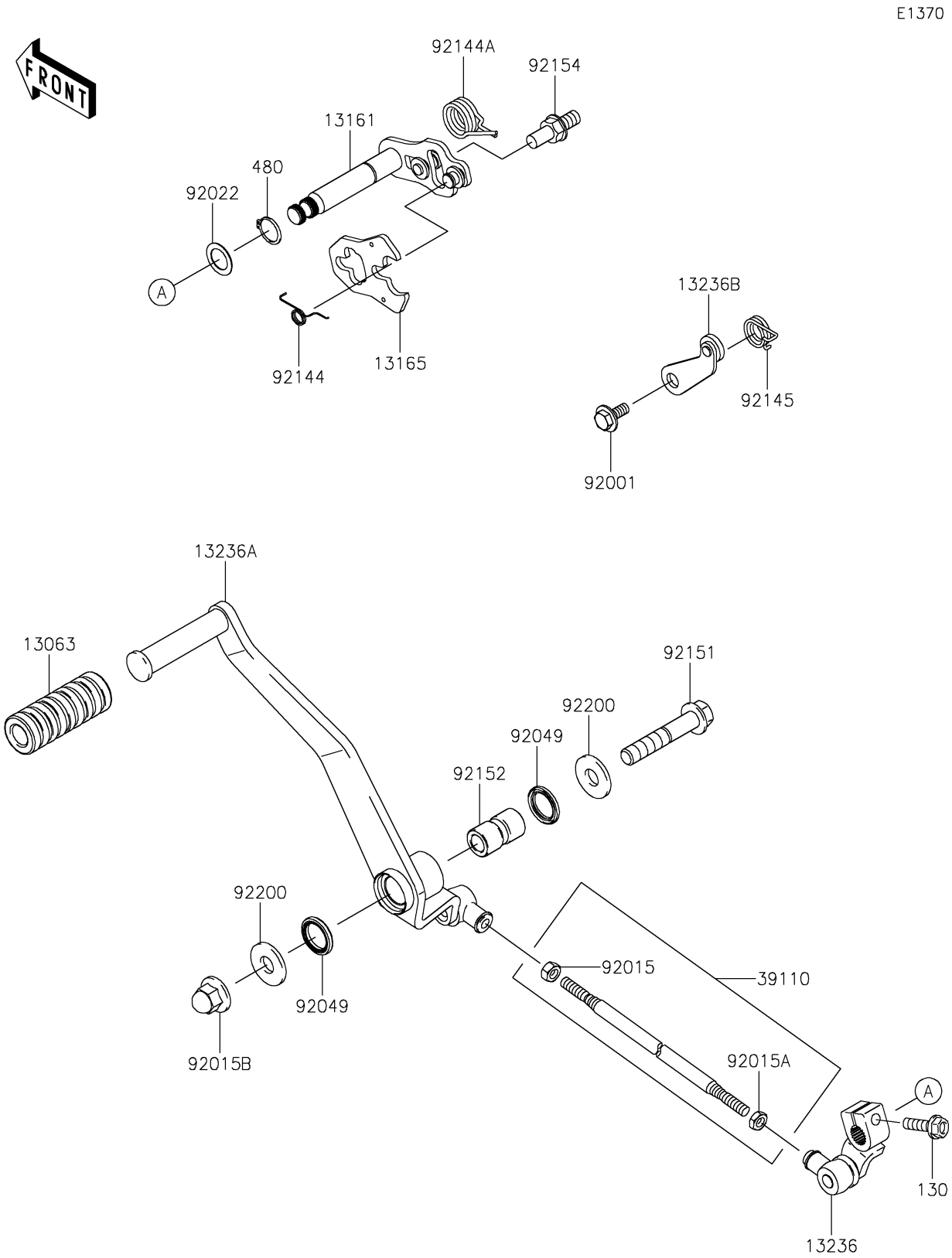

© 2026 Kawasaki Motors Corp., U.S.A.

2024 Vulcan 900 Custom

PARTS LIST

Gear Change Mechanism

ITEM NAME	PART NUMBER	QUANTITY
DAMPER,PEDAL (Ref # 13063)	13063-002	1
LEVER-COMP-CHANGE SHAFT (Ref # 13161)	13161-0046	1
PAWL,CHANGE LEVER (Ref # 13165)	13165-1151	1
LEVER-COMP (Ref # 13236)	13236-0132	1
LEVER-COMP (Ref # 13236A)	13236-0172	1
LEVER-COMP,POSITION (Ref # 13236B)	13236-1126	1
ROD-ASSY-TIE (Ref # 39110)	39110-1100	1
BOLT,FLANGED,6X14 (Ref # 92001)	92001-1715	1
NUT,6MM (Ref # 92015)	92015-1443	1
NUT,LEFT HANDED,6MM (Ref # 92015A)	92015-1444	1
NUT,10MM (Ref # 92015B)	92015-1649	1
WASHER,13.2X20X0.5 (Ref # 92022)	92022-1224	1
SEAL-OIL (Ref # 92049)	92049-0093	2
SPRING (Ref # 92144)	92144-1029	1
SPRING,CHANGE PEDAL RETURN (Ref # 92144A)	92144-1074	1
SPRING,RETURN (Ref # 92145)	92145-0462	1
BOLT,FLANGED,10X54 (Ref # 92151)	92151-1785	1
COLLAR,10.5X17X30.5 (Ref # 92152)	92152-0531	1
BOLT,RETURN SPRING (Ref # 92154)	92154-1885	1
WASHER,11X26X2.6 (Ref # 92200)	92200-0352	2
BOLT-FLANGED,6X20 (Ref # 130)	130CB0620	1
CIRCLIP-TYPE-C,13MM (Ref # 480)	480J1300	1

© 2026 Kawasaki Motors Corp., U.S.A.