2025 Vulcan 900 Classic

PARTS DIAGRAM

Turn Signals

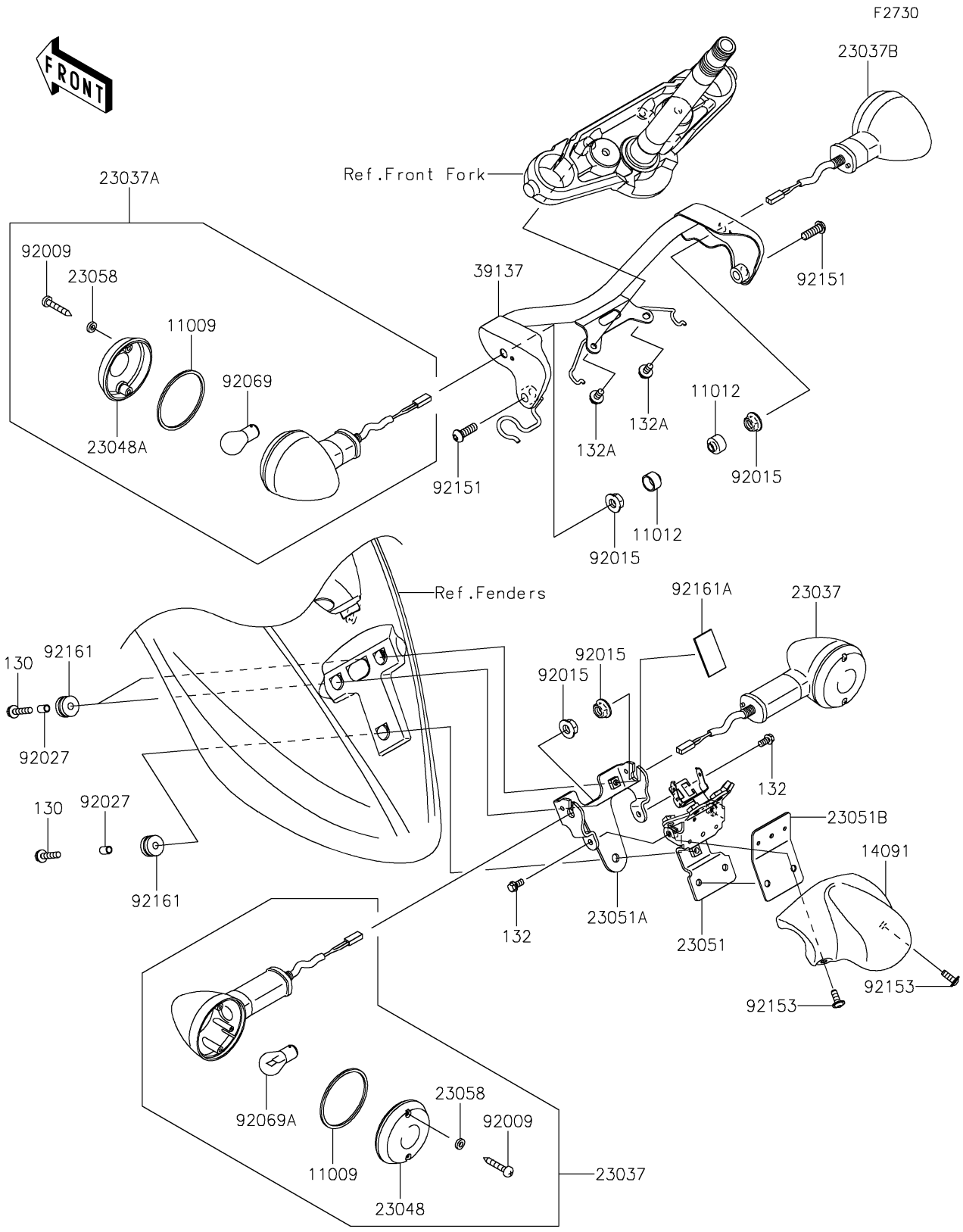

© 2026 Kawasaki Motors Corp., U.S.A.

2025 Vulcan 900 Classic

PARTS LIST

Turn Signals

ITEM NAME	PART NUMBER	QUANTITY
GASKET,SIGNAL LAMP (Ref # 11009)	11009-1413	4
CAP (Ref # 11012)	11012-1367	2
COVER (Ref # 14091)	14091-0525	1
LAMP-ASSY-SIGNAL,RR (Ref # 23037)	23037-0087	2
LAMP-ASSY-SIGNAL,FR,LH (Ref # 23037A)	23037-0511	1
LAMP-ASSY-SIGNAL,FR,RH (Ref # 23037B)	23037-0512	1
LENS-SIGNAL LAMP (Ref # 23048)	23048-0036	2
LENS-SIGNAL LAMP (Ref # 23048A)	23048-0037	2
BRACKET-SIGNAL LAMP,RR,LWR (Ref # 23051)	23051-0020	1
BRACKET-SIGNAL LAMP,RR,UPP (Ref # 23051A)	23051-0021	1
BRACKET-SIGNAL LAMP,RR (Ref # 23051B)	23051-0022	1
WASHER,PLAIN,4MM (Ref # 23058)	23058-002	8
STAY-COMP,FR SIGNAL LAMP,BLK (Ref # 39137)	39137-0564-21	1
SCREW,TAPPING,4X25 (Ref # 92009)	92009-1637	8
NUT,10MM (Ref # 92015)	92015-1356	4
COLLAR,6.8X10X15 (Ref # 92027)	92027-1941	3
BULB,12V 21/5W (Ref # 92069)	92069-063	2
BULB,12V 21W (Ref # 92069A)		2
BOLT,SOCKET,8X25 (Ref # 92151)	92151-1327	2
BOLT,SOCKET,6X16 (Ref # 92153)	92153-0817	2
DAMPER (Ref # 92161)	92161-0163	3
DAMPER,45X25X2 (Ref # 92161A)	92161-1381	2
BOLT-FLANGED,6X30 (Ref # 130)	130CA0630	3
BOLT-FLANGED-SMALL,6X12 (Ref # 132)	132BB0612	2
BOLT-FLANGED-SMALL,6X12 (Ref # 132A)	132E0612	2

© 2026 Kawasaki Motors Corp., U.S.A.