2025 Vulcan 900 Classic

PARTS DIAGRAM

Meter(s)

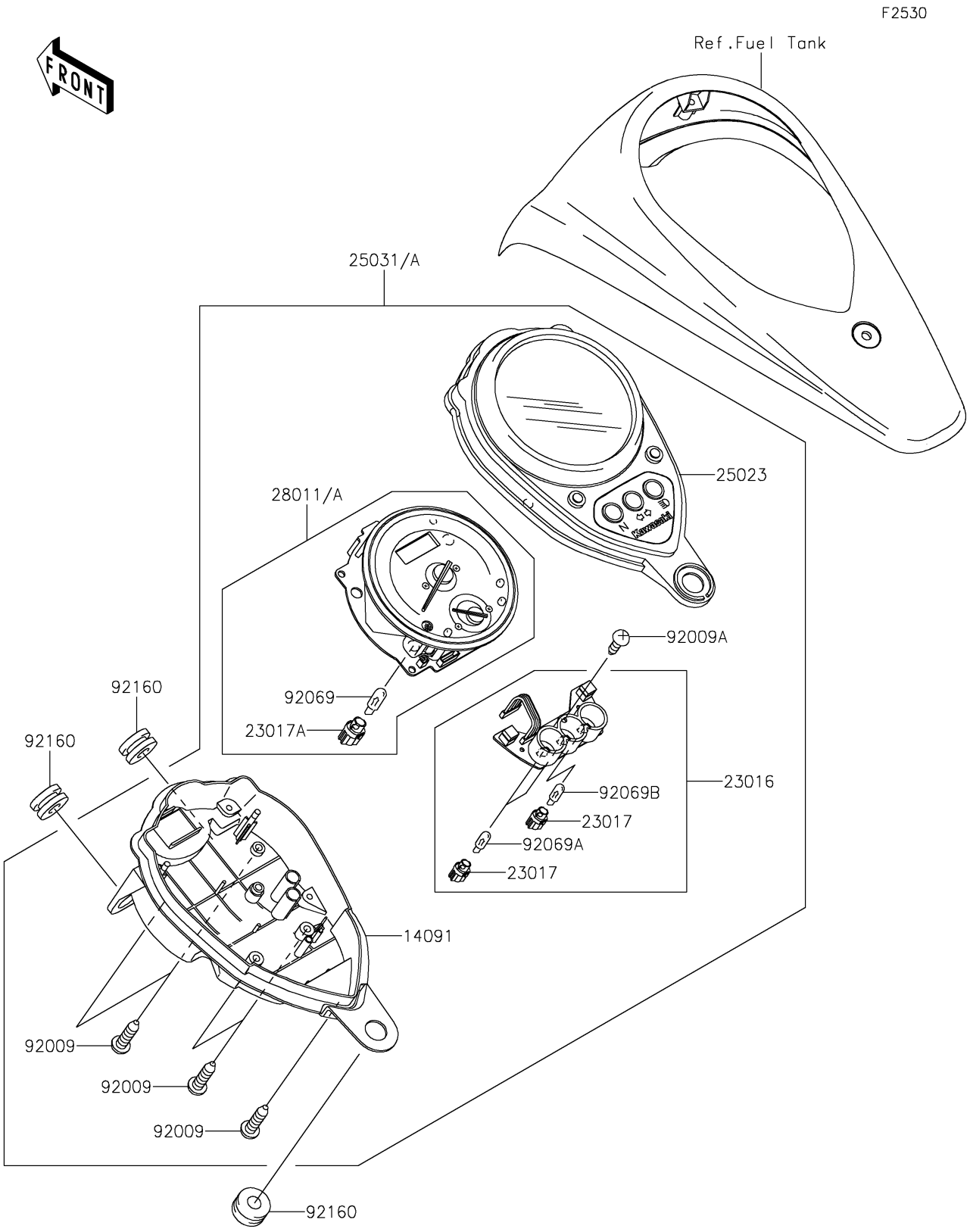

© 2026 Kawasaki Motors Corp., U.S.A.

2025 Vulcan 900 Classic

PARTS LIST

Meter(s)

ITEM NAME	PART NUMBER	QUANTITY
COVER,METER,LWR (Ref # 14091)	14091-1215	1
LAMP-ASSY (Ref # 23016)	23016-1186	1
SOCKET,WEDGE BASE,T-5 (Ref # 23017)	23017-1063	3
SOCKET (Ref # 23017A)	23017-1064	1
COVER-METER CASE,UPP (Ref # 25023)	25023-0057	1
METER-ASSY,MPH (Ref # 25031)	25031-0321	1
METER-ASSY,KPH (Ref # 25031A)	25031-0323	1
METER,SPEED&FUEL,MPH (Ref # 28011)	28011-0147	1
METER,SPEED&FUEL,KPH (Ref # 28011A)	28011-0168	1
SCREW,TAPPING,4X16 (Ref # 92009)	92009-1163	5
SCREW,TAPPING,4X14 (Ref # 92009A)	92009-1503	1
BULB,14V 3W,T6.5 (Ref # 92069)	92069-1068	1
BULB,12V 2W,T5 (Ref # 92069A)	92069-1105	2
BULB,12V 1.4W,T5 (Ref # 92069B)	92069-1117	1
DAMPER (Ref # 92160)	92160-1162	3

© 2026 Kawasaki Motors Corp., U.S.A.