2026 VULCAN® 900 CLASSIC

PARTS DIAGRAM

Handlebar

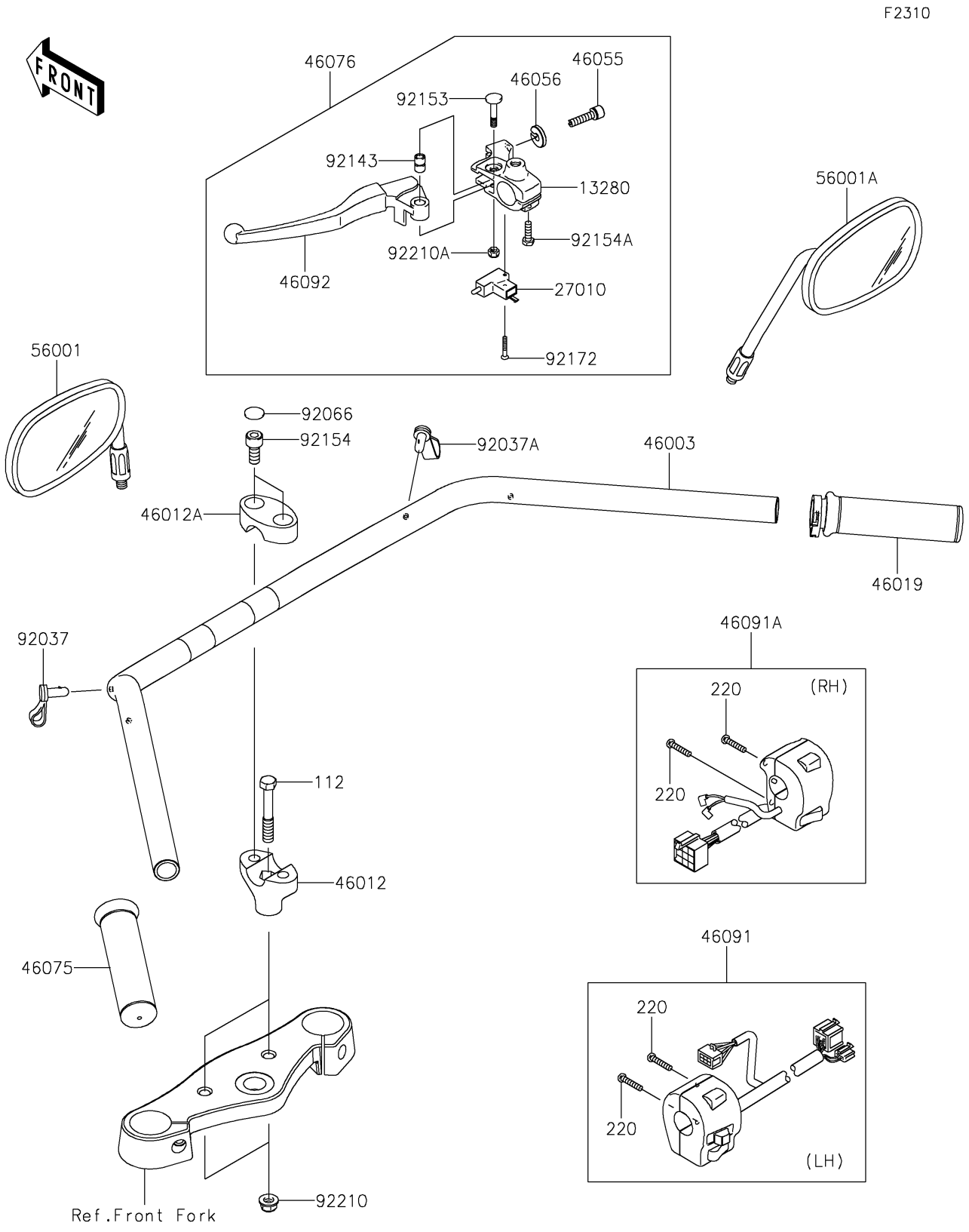

© 2026 Kawasaki Motors Corp., U.S.A.

2026 VULCAN® 900 CLASSIC

PARTS LIST

Handlebar

ITEM NAME	PART NUMBER	QUANTITY
HOLDER,CLUTCH LEVER (Ref # 13280)	13280-1101	1
SWITCH,CLUTCH (Ref # 27010)	27010-1268	1
HANDLE (Ref # 46003)	46003-0155	1
HOLDER-HANDLE,LWR,F.BLACK (Ref # 46012)	46012-0311-21	2
HOLDER-HANDLE,UPP,F.BLACK (Ref # 46012A)	46012-1292-21	2
GRIP-ASSY,THROTTLE (Ref # 46019)	46019-1123	1
SCREW,CABLE ADJUST,8MM (Ref # 46055)	46055-003	1
NUT,CABLE ADJUST LOCK,8MM (Ref # 46056)	46056-005	1
GRIP,LH (Ref # 46075)	46075-1212	1
LEVER-ASSY-GRIP,CLUTCH (Ref # 46076)	46076-0075	1
HOUSING-ASSY-CONTROL,LH (Ref # 46091)	46091-0230	1
HOUSING-ASSY-CONTROL,RH (Ref # 46091A)	46091-0231	1
LEVER-GRIP,CLUCTH (Ref # 46092)	46092-1204	1
MIRROR-ASSY,LH (Ref # 56001)	56001-0282	1
MIRROR-ASSY,RH (Ref # 56001A)	56001-0283	1
CLAMP,SPEED,L=58 (Ref # 92037)	92037-1163	3
CLAMP,SPEED,L=80.5 (Ref # 92037A)	92037-1903	1
PLUG (Ref # 92066)	92066-0718	4
COLLAR (Ref # 92143)	92143-1351	1
BOLT,LEVER SET (Ref # 92153)	92153-0716	1
BOLT,SOCKET,10X25 (Ref # 92154)	92154-0350	4
BOLT,6X20 (Ref # 92154A)	92154-4384	1
SCREW,3X20 (Ref # 92172)	92172-0164	1
NUT,LOCK,FLANGED,10MM (Ref # 92210)	92210-1139	2
NUT,LOCK,6MM (Ref # 92210A)	92210-1544	1
BOLT-UPSET,10X65 (Ref # 112)	112BA1065	2
SCREW-PAN-CROS,5X25 (Ref # 220)	220R0525	4

© 2026 Kawasaki Motors Corp., U.S.A.