2025 Vulcan 900 Classic

PARTS DIAGRAM

Water Pump

E3031

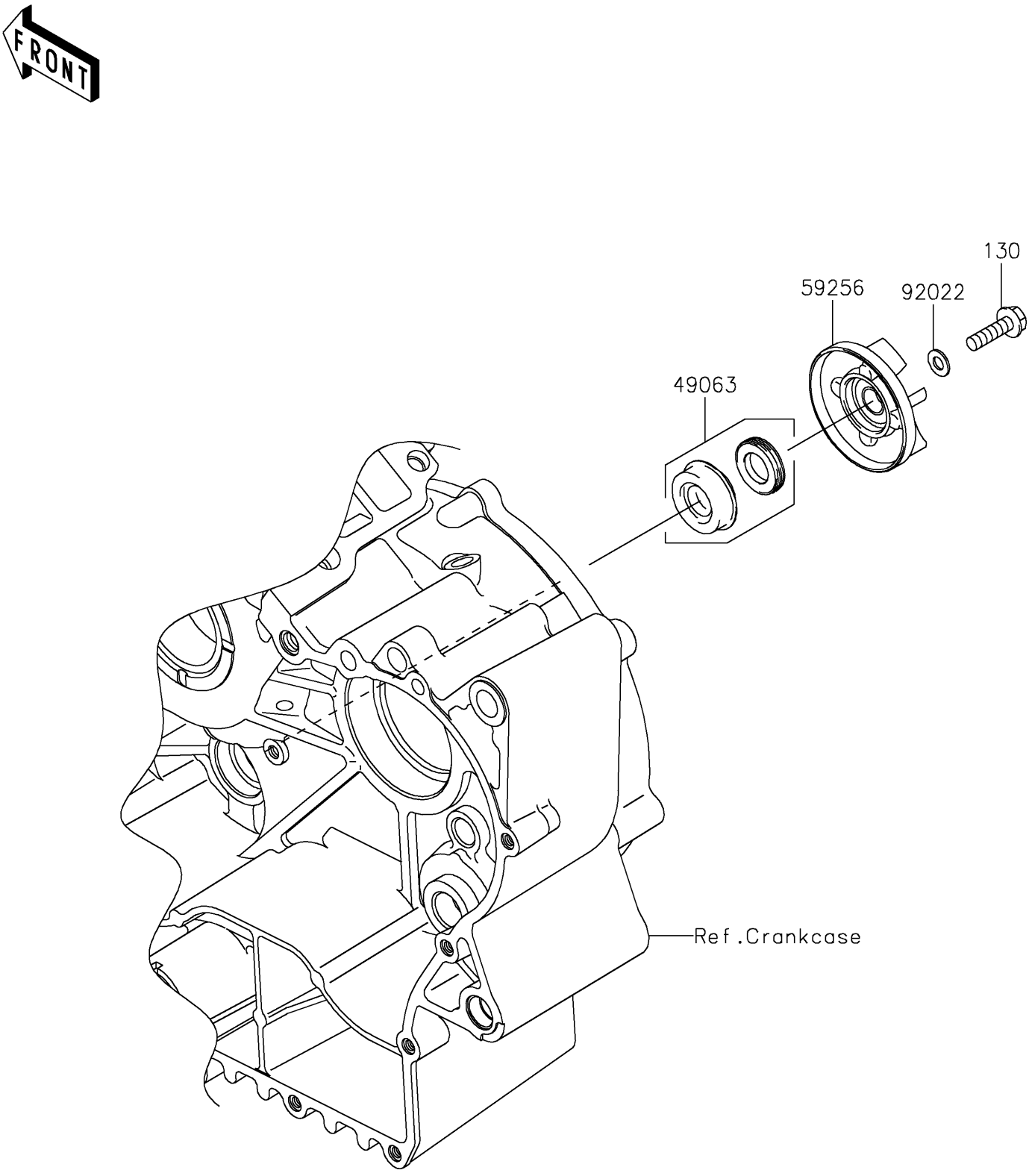

© 2026 Kawasaki Motors Corp., U.S.A.

2025 Vulcan 900 Classic

PARTS LIST

Water Pump

ITEM NAME	PART NUMBER	QUANTITY
SEAL-MECHANICAL (Ref # 49063)	49063-1055	1
IMPELLER (Ref # 59256)	59256-1073	1
WASHER,6.1X12X1 (Ref # 92022)	92022-077	1
BOLT-FLANGED,6X22 (Ref # 130)	130BA0622	1

© 2026 Kawasaki Motors Corp., U.S.A.