2025 Vulcan 900 Classic

PARTS DIAGRAM

Ignition System

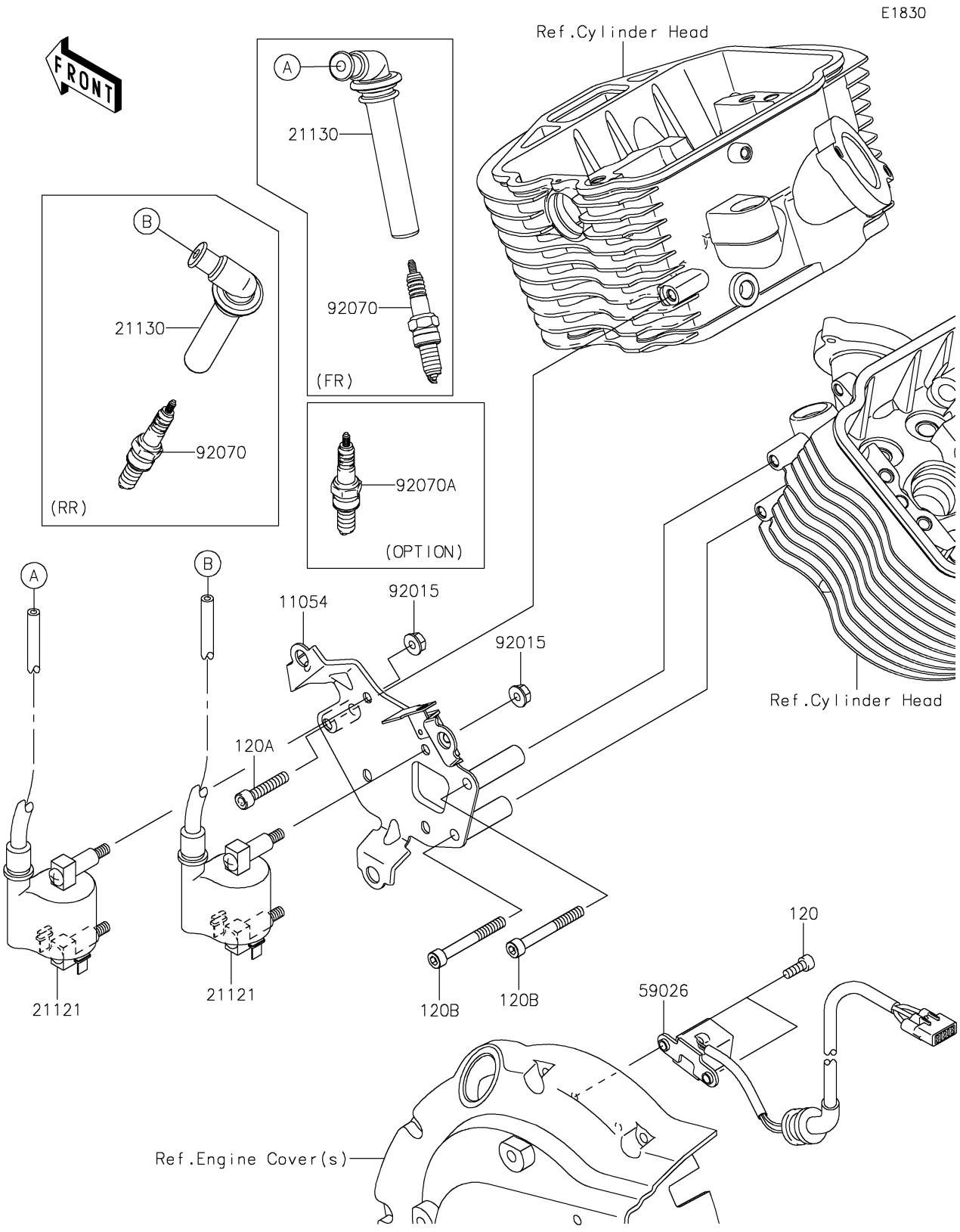

© 2026 Kawasaki Motors Corp., U.S.A.

2025 Vulcan 900 Classic

PARTS LIST

Ignition System

ITEM NAME	PART NUMBER	QUANTITY
BRACKET,IGNITION COIL (Ref # 11054)	11054-1537	1
COIL-IGNITION (Ref # 21121)	21121-0027	2
CAP-SPARK PLUG (Ref # 21130)	21130-1075	2
COIL-PULSING (Ref # 59026)	59026-0017	1
NUT,FLANGED,6MM (Ref # 92015)	92015-1367	4
PLUG-SPARK,CPR7EA-9(NGK) (Ref # 92070)	92070-0022	2
PLUG-SPARK,CPR8EA-9(NGK) (Ref # 92070A)	92070-0029	2
BOLT-SOCKET,5X14 (Ref # 120)	120CA0514	2
BOLT-SOCKET,6X35 (Ref # 120A)	120CA0635	1
BOLT-SOCKET,6X55 (Ref # 120B)	120CA0655	2

© 2026 Kawasaki Motors Corp., U.S.A.