2024 Vulcan 900 Classic

PARTS DIAGRAM

Oil Filter

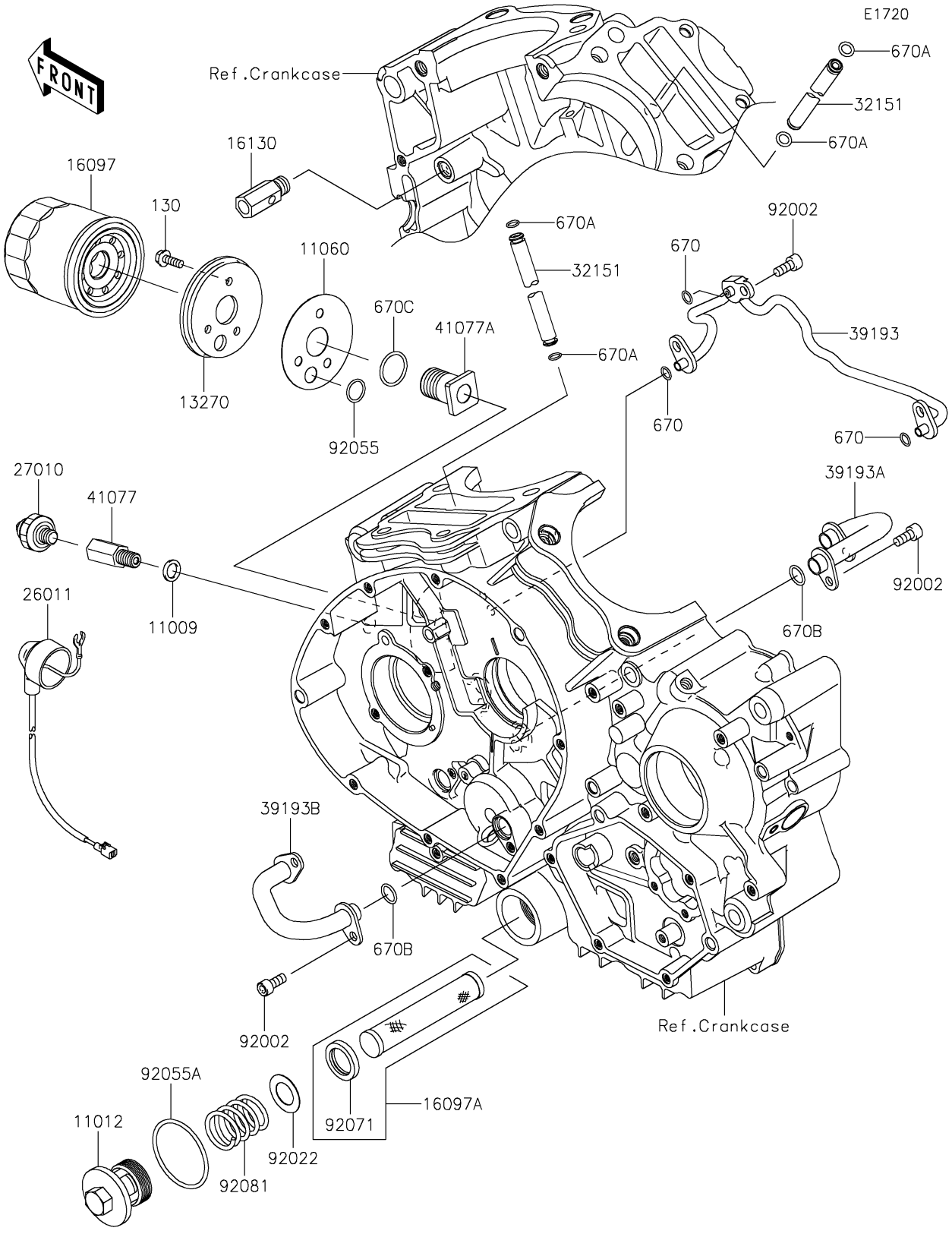

© 2026 Kawasaki Motors Corp., U.S.A.

2024 Vulcan 900 Classic

PARTS LIST

Oil Filter

ITEM NAME	PART NUMBER	QUANTITY
GASKET,10X14.5X1.5 (Ref # 11009)	11009-1105	1
CAP,OIL FILTER (Ref # 11012)	11012-1461	1
GASKET,OIL FILTER (Ref # 11060)	11060-1092	1
PLATE,OIL FILTER (Ref # 13270)	13270-1170	1
FILTER-ASSY-OIL (Ref # 16097)	16097-0008	1
FILTER-ASSY-OIL (Ref # 16097A)	16097-1058	1
VALVE-ASSY-RELIEF (Ref # 16130)	16130-0002	1
WIRE-LEAD (Ref # 26011)	26011-0109	1
SWITCH,OIL PRESSURE (Ref # 27010)	27010-1313	1
PIPE (Ref # 32151)	32151-1895	2
PIPE-OIL (Ref # 39193)	39193-0035	1
PIPE-OIL (Ref # 39193A)	39193-0036	1
PIPE-OIL (Ref # 39193B)	39193-0037	1
ADAPTER,PRESSURE SWITCH (Ref # 41077)	41077-0017	1
ADAPTER (Ref # 41077A)	41077-0024	1
BOLT,SOCKET,6X14 (Ref # 92002)	92002-1592	7
WASHER,16.5X28X0.5 (Ref # 92022)	92022-169	1
RING-O,13.0X1.9 (Ref # 92055)	92055-1011	1
RING-O,35.2X2.4 (Ref # 92055A)	92055-1358	1
GROMMET,OIL STRAINER (Ref # 92071)	92071-100	1
SPRING,OIL FILTER (Ref # 92081)	92081-1862	1
BOLT-FLANGED,5X14 (Ref # 130)	130CA0514	3
O RING,6MM (Ref # 670)	670D1506	3
O RING,7MM (Ref # 670A)	670D1507	4
O RING,12MM (Ref # 670B)	670D2012	4
O RING,20MM (Ref # 670C)	670D2020	1

© 2026 Kawasaki Motors Corp., U.S.A.