2026 VULCAN® 900 CLASSIC

PARTS DIAGRAM

Fuel Injection

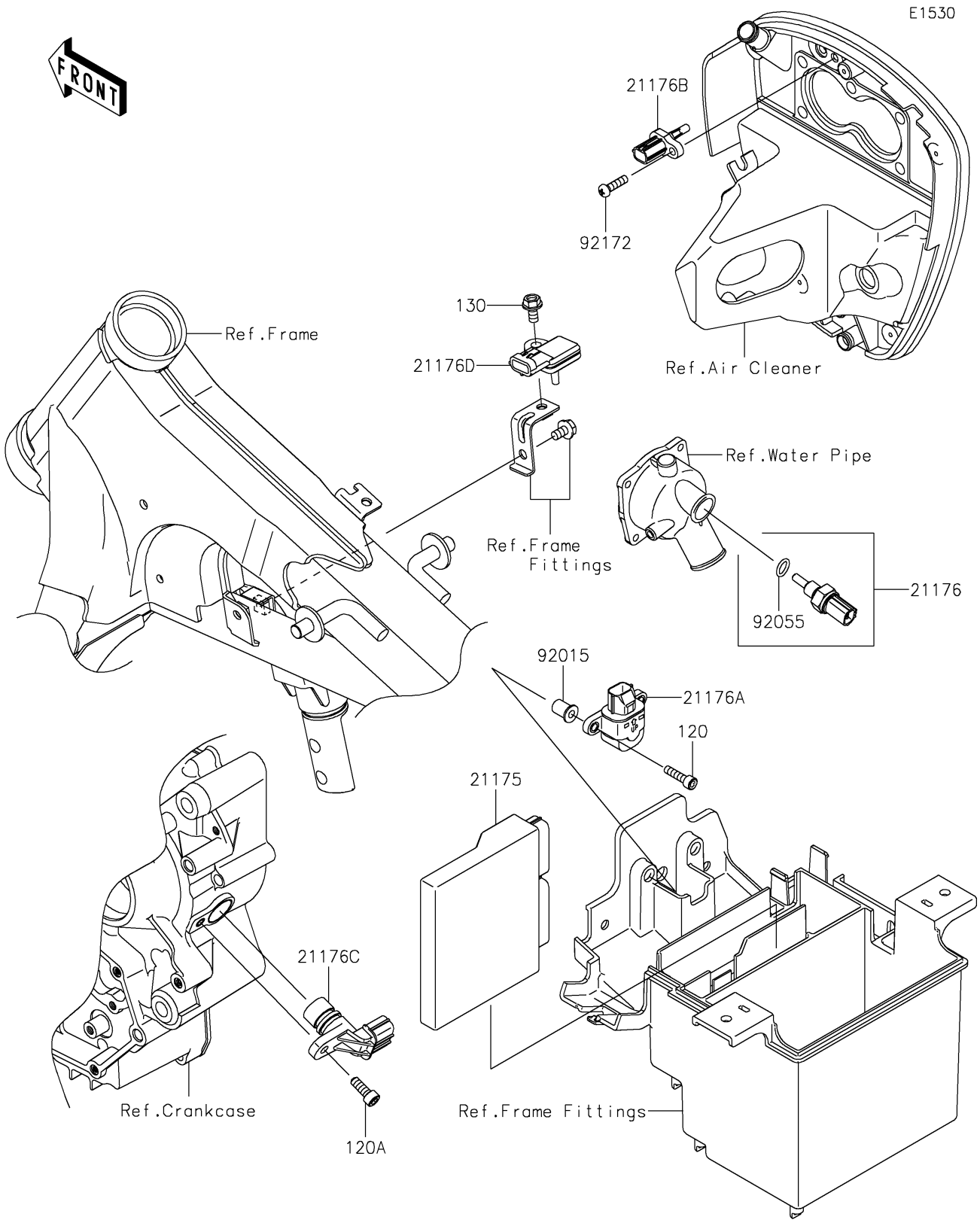

© 2026 Kawasaki Motors Corp., U.S.A.

2026 VULCAN® 900 CLASSIC

PARTS LIST

Fuel Injection

ITEM NAME	PART NUMBER	QUANTITY

© 2026 Kawasaki Motors Corp., U.S.A.