2026 VULCAN® 900 CLASSIC

PARTS DIAGRAM

Gear Change Drum/Shift Fork(s)

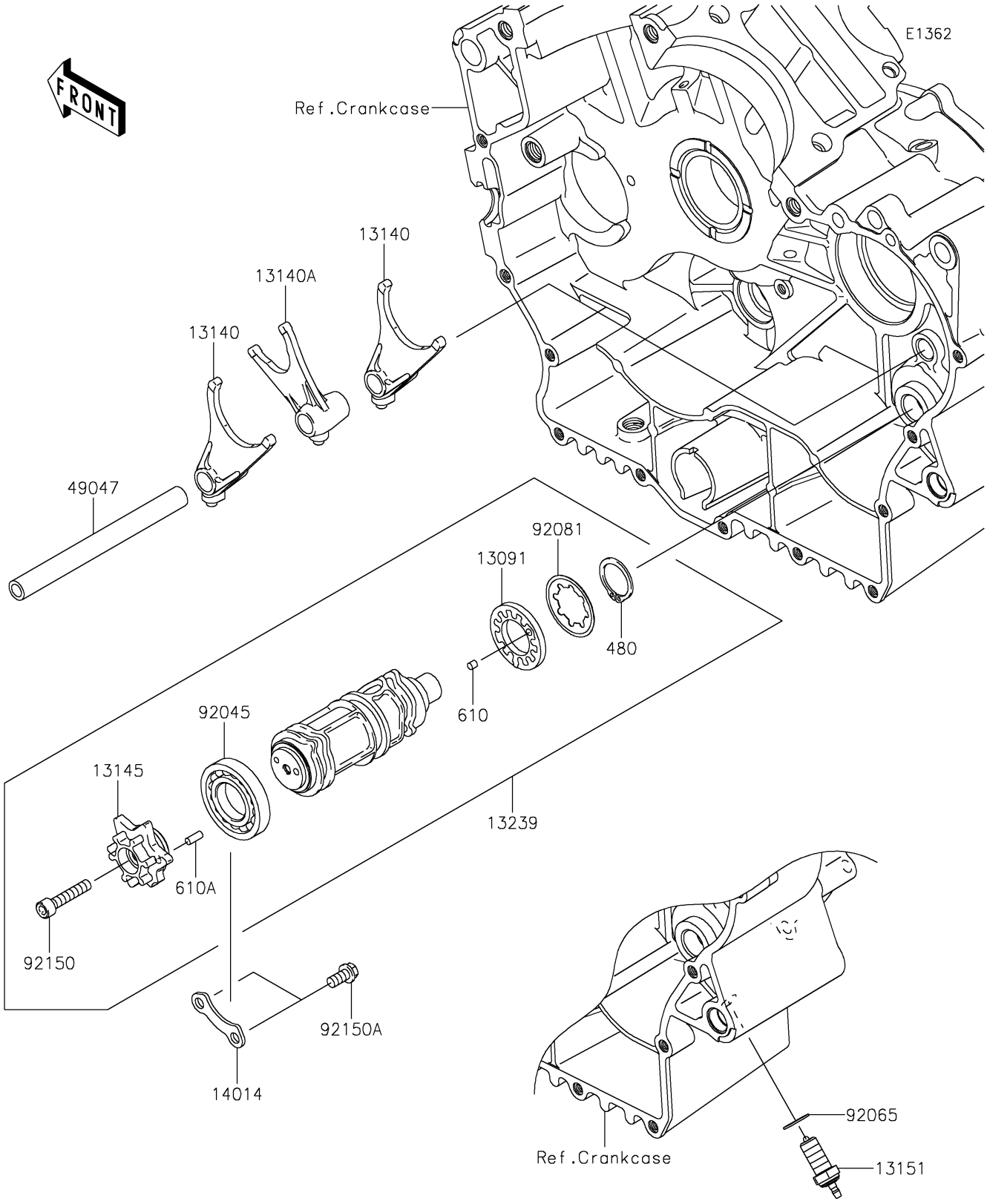

© 2026 Kawasaki Motors Corp., U.S.A.

2026 VULCAN® 900 CLASSIC

PARTS LIST

Gear Change Drum/Shift Fork(s)

ITEM NAME	PART NUMBER	QUANTITY
HOLDER,CHANGE DRUM (Ref # 13091)	13091-1389	1
FORK-SHIFT (Ref # 13140)	13140-0031	2
FORK-SHIFT (Ref # 13140A)	13140-1138	1
CAM-CHANGE DRUM (Ref # 13145)	13145-0028	1
SWITCH-COMP (Ref # 13151)	13151-1085	1
DRUM-ASSY-CHANGE (Ref # 13239)	13239-0018	1
PLATE-POSITION (Ref # 14014)	14014-1014	1
ROD-SHIFT (Ref # 49047)	49047-0036	1
BEARING-BALL,16005 (Ref # 92045)	92045-1045	1
GASKET,10.5X16X1 (Ref # 92065)	92065-058	1
SPRING (Ref # 92081)	92081-1895	1
BOLT,SOCKET,6X30 (Ref # 92150)	92150-1433	1
BOLT,6X12 (Ref # 92150A)	92150-1868	2
CIRCLIP-TYPE-C,22MM (Ref # 480)	480J2200	1
ROLLER,4X4 (Ref # 610)	610A0404	1
ROLLER,4X10 (Ref # 610A)	610A0410	1

© 2026 Kawasaki Motors Corp., U.S.A.