2025 W800

PARTS DIAGRAM

Engine Mount

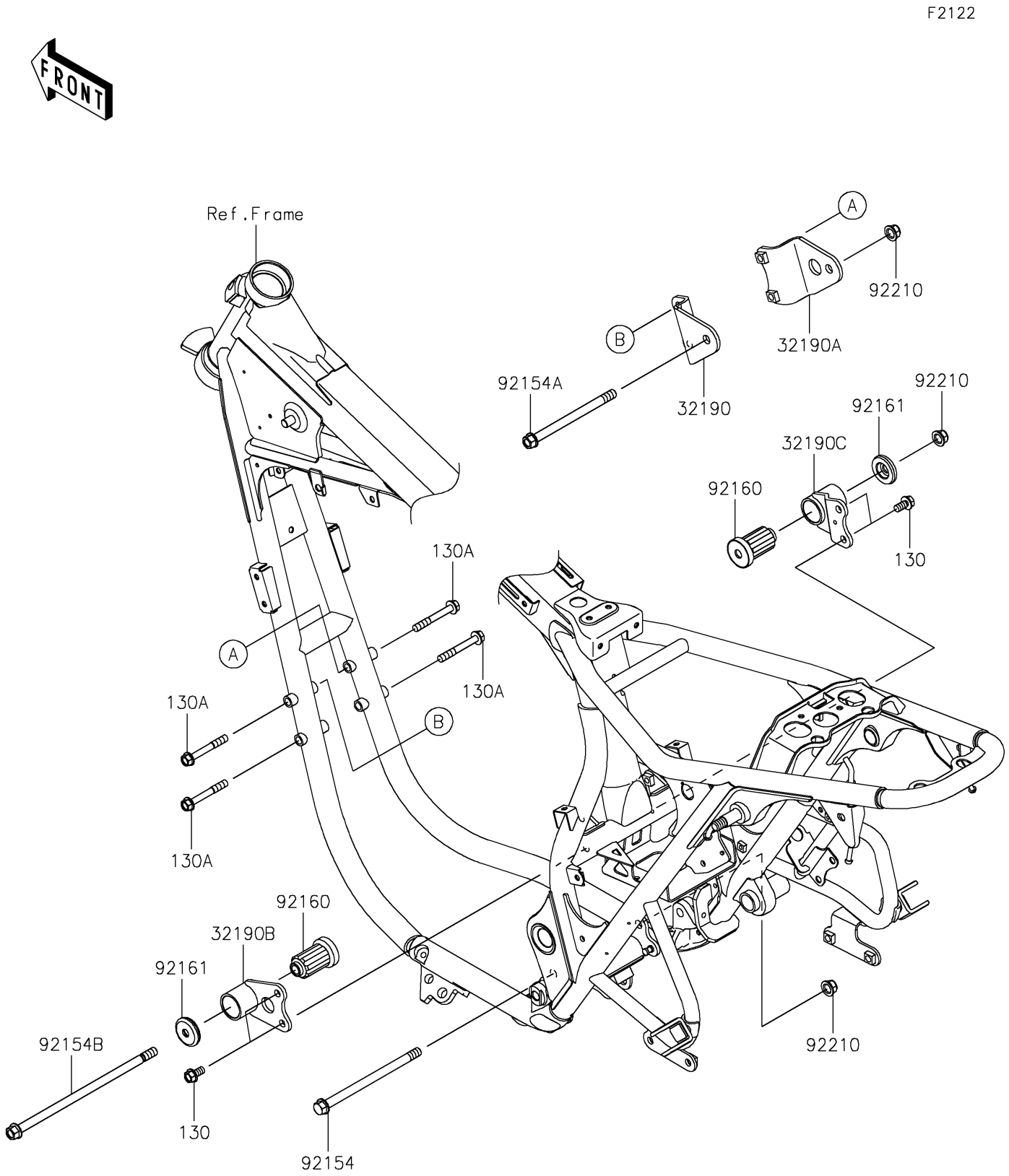

© 2026 Kawasaki Motors Corp., U.S.A.

2025 W800

PARTS LIST

Engine Mount

ITEM NAME	PART NUMBER	QUANTITY
BRACKET-ENGINE,FR,LH (Ref # 32190)	32190-0473	1
BRACKET-ENGINE,FR,RH (Ref # 32190A)	32190-0474	1
BRACKET-ENGINE,RR,UPP,LH (Ref # 32190B)	32190-1173	1
BRACKET-ENGINE,RR,UPP,RH (Ref # 32190C)	32190-1226	1
BOLT,FLANGED,10X158 (Ref # 92154)	92154-0514	1
BOLT,FLANGED,10X135 (Ref # 92154A)	92154-3891	1
BOLT,FLANGED,10X230 (Ref # 92154B)	92154-3892	1
DAMPER,ENGINE MOUNT (Ref # 92160)	92160-1483	2
DAMPER (Ref # 92161)	92161-0598	2
NUT,LOCK,FLANGED,10MM (Ref # 92210)	92210-0276	3
BOLT-FLANGED,8X16 (Ref # 130)	130BA0816	4
BOLT-FLANGED,8X60 (Ref # 130A)	130CA0860	4

© 2026 Kawasaki Motors Corp., U.S.A.