2025 W800

PARTS DIAGRAM

Air Cleaner

E1130

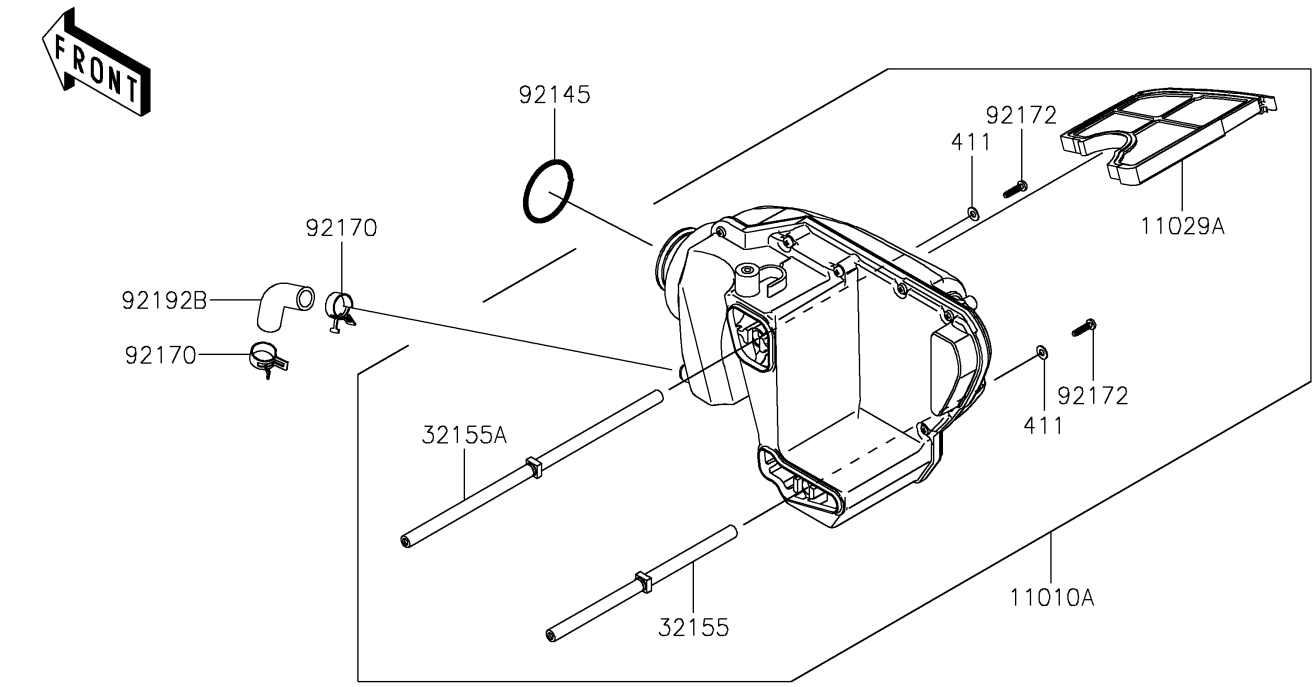

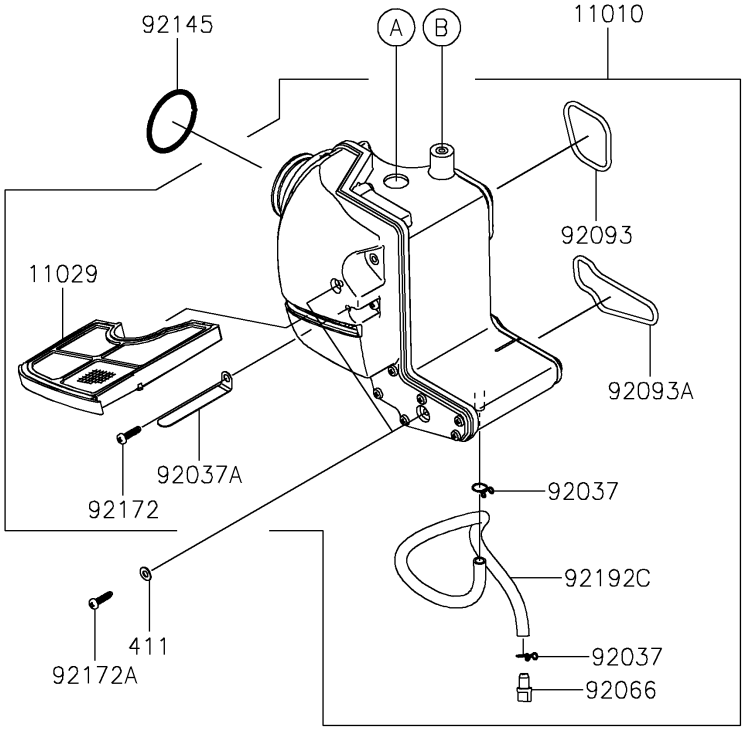

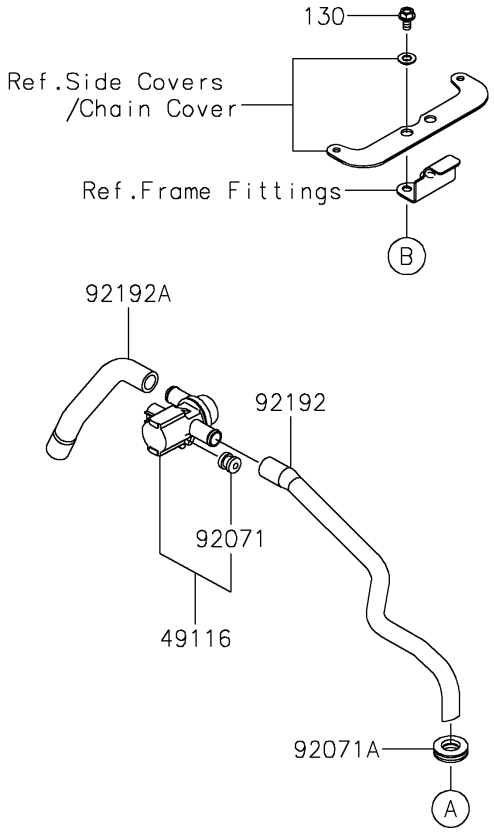

© 2026 Kawasaki Motors Corp., U.S.A.

2025 W800

PARTS LIST

Air Cleaner

ITEM NAME	PART NUMBER	QUANTITY
FILTER-ASSY-AIR,LH (Ref # 11010)	11010-0972	1
FILTER-ASSY-AIR,RH (Ref # 11010A)	11010-0973	1
ELEMENT-ASSY-AIR FILTER,LH (Ref # 11029)	11029-0012	1
ELEMENT-ASSY-AIR FILTER,RH (Ref # 11029A)	11029-0013	1
PIPE,L=218 (Ref # 32155)	32155-0462	1
PIPE,L=303 (Ref # 32155A)	32155-0463	1
VALVE-ASSY,AIR CUT (Ref # 49116)	49116-0713	1
CLAMP,TUBE (Ref # 92037)	92037-147	2
CLAMP (Ref # 92037A)	92037-1679	1
PLUG,DRAIN (Ref # 92066)	92066-1211	1
GROMMET (Ref # 92071)	92071-0026	1
GROMMET,AIR SUCTION VALVE (Ref # 92071A)	92071-1249	1
SEAL (Ref # 92093)	92093-1496	1
SEAL (Ref # 92093A)	92093-1497	1
SPRING (Ref # 92145)	92145-0795	2
CLAMP (Ref # 92170)	92170-1060	2
SCREW,TAPPING,5X20 (Ref # 92172)	92172-0009	3
SCREW,TAPPING,5X20 (Ref # 92172A)	92172-0011	2
TUBE,ACV-A/C (Ref # 92192)	92192-0916	1
TUBE,HEAD-ACV (Ref # 92192A)	92192-0917	1
TUBE,BREATHER (Ref # 92192B)	92192-0972	1
TUBE,DRAIN (Ref # 92192C)	92192-1034	1
BOLT-FLANGED,6X12 (Ref # 130)	130BA0612	2
WASHER-PLAIN,5MM (Ref # 411)	411AB0500	4

© 2026 Kawasaki Motors Corp., U.S.A.