# 2026 VULCAN® 900 CLASSIC LT

## PARTS DIAGRAM

### Cables

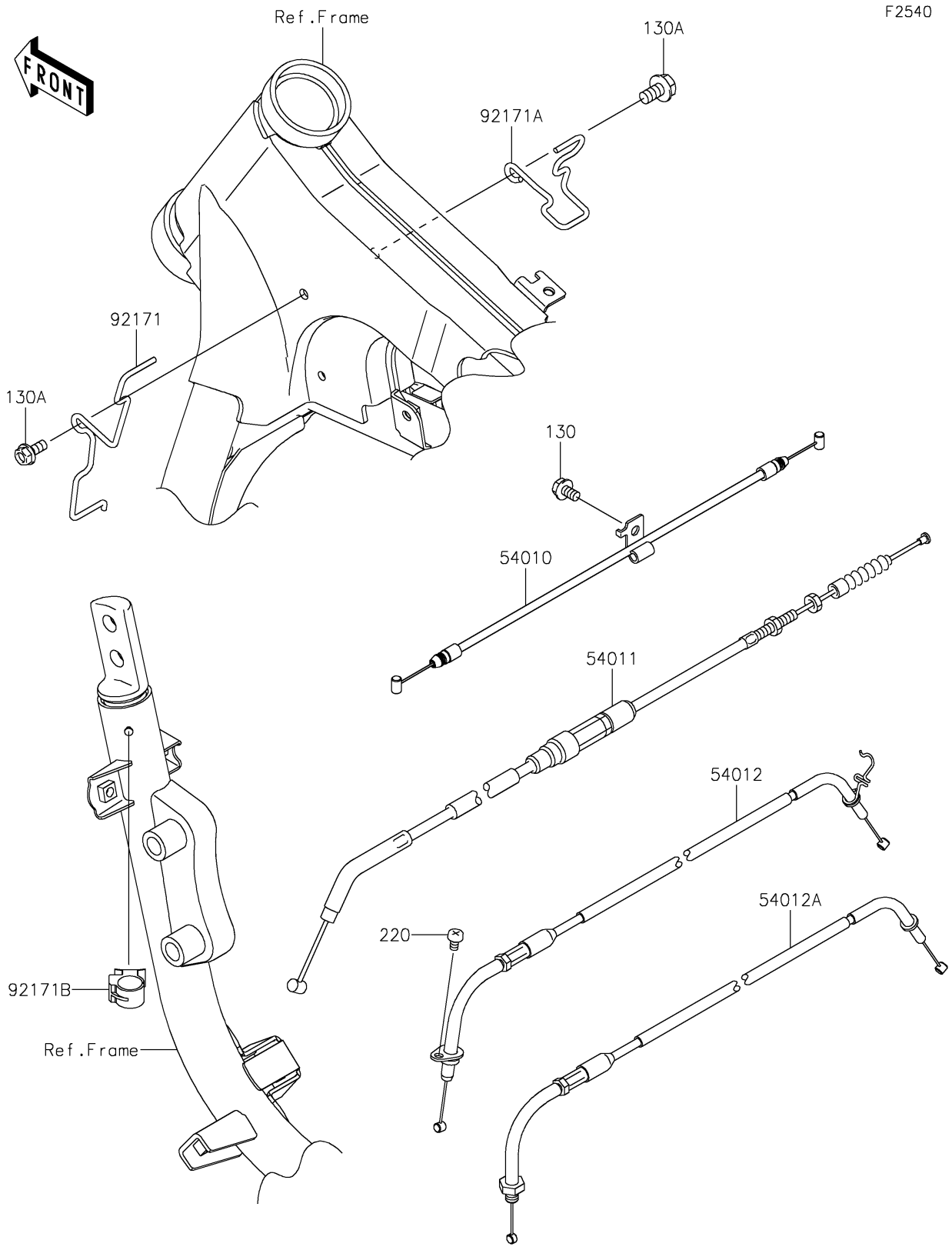


© 2026 Kawasaki Motors Corp., U.S.A.

# 2026 VULCAN® 900 CLASSIC LT

## PARTS LIST

### Cables

| ITEM NAME | PART NUMBER | QUANTITY |
|---|---|---|
| CABLE,SEAT LOCK (Ref # 54010) | 54010-0065 | 1 |
| CABLE-CLUTCH (Ref # 54011) | 54011-0070 | 1 |
| CABLE-THROTTLE,OPENING (Ref # 54012) | 54012-0171 | 1 |
| CABLE-THROTTLE,CLOSING (Ref # 54012A) | 54012-0172 | 1 |
| CLAMP,FR,LH (Ref # 92171) | 92171-0597 | 1 |
| CLAMP,FR,RH (Ref # 92171A) | 92171-0605 | 1 |
| CLAMP,15MM DIA. (Ref # 92171B) | 92171-1424 | 1 |
| BOLT-FLANGED,6X10 (Ref # 130) | 130BB0610 | 1 |
| BOLT-FLANGED,6X14 (Ref # 130A) | 130BB0614 | 2 |
| SCREW-PAN-CROS,5X8 (Ref # 220) | 220AB0508 | 1 |

© 2026 Kawasaki Motors Corp., U.S.A.