2023 VULCAN® 900 CLASSIC LT

PARTS DIAGRAM

Generator

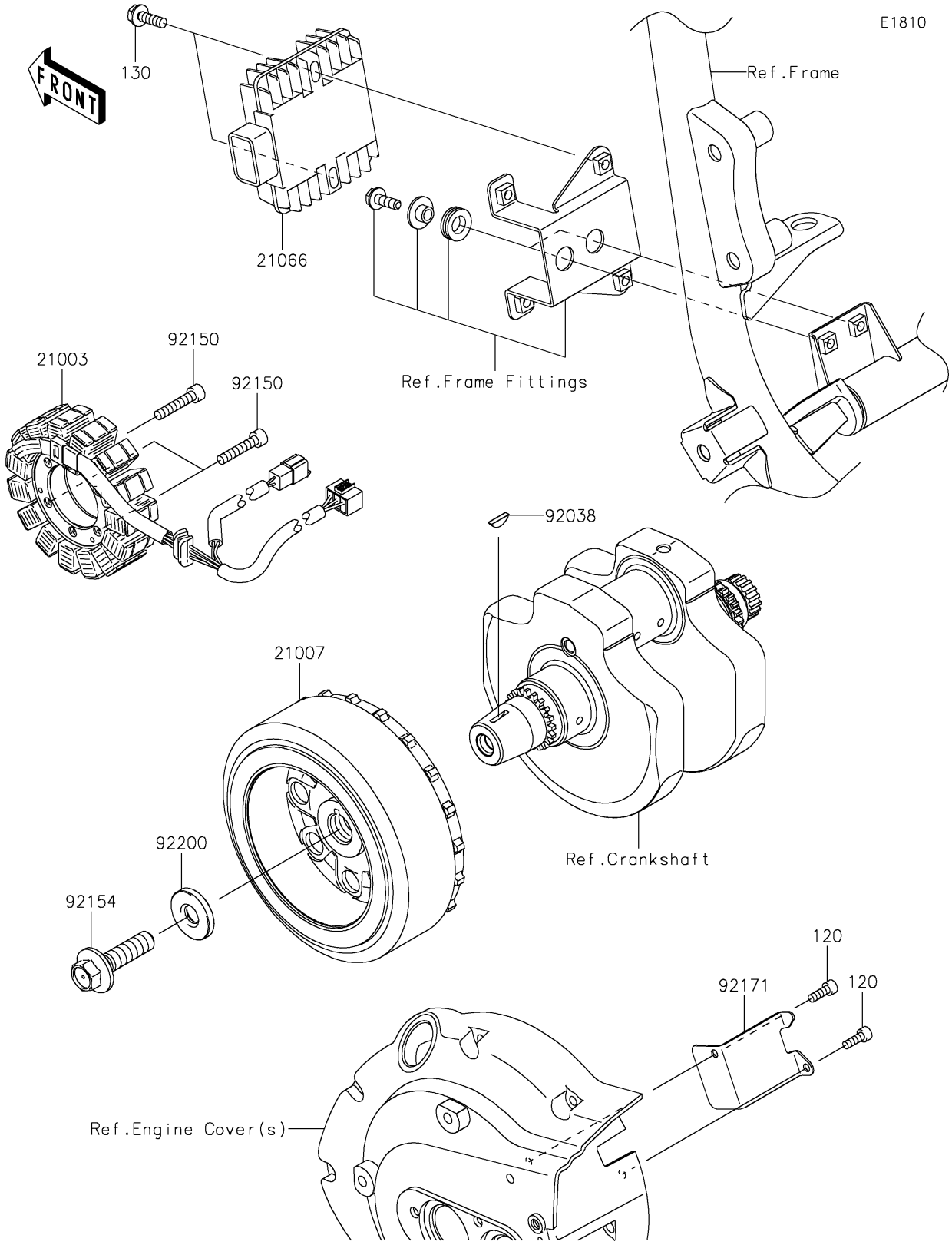

© 2026 Kawasaki Motors Corp., U.S.A.

2023 VULCAN® 900 CLASSIC LT

PARTS LIST

Generator

ITEM NAME	PART NUMBER	QUANTITY

© 2026 Kawasaki Motors Corp., U.S.A.