2002 Ninja® ZX™-9R

PARTS DIAGRAM

Side Covers/Chain Cover(ZX900-F1)

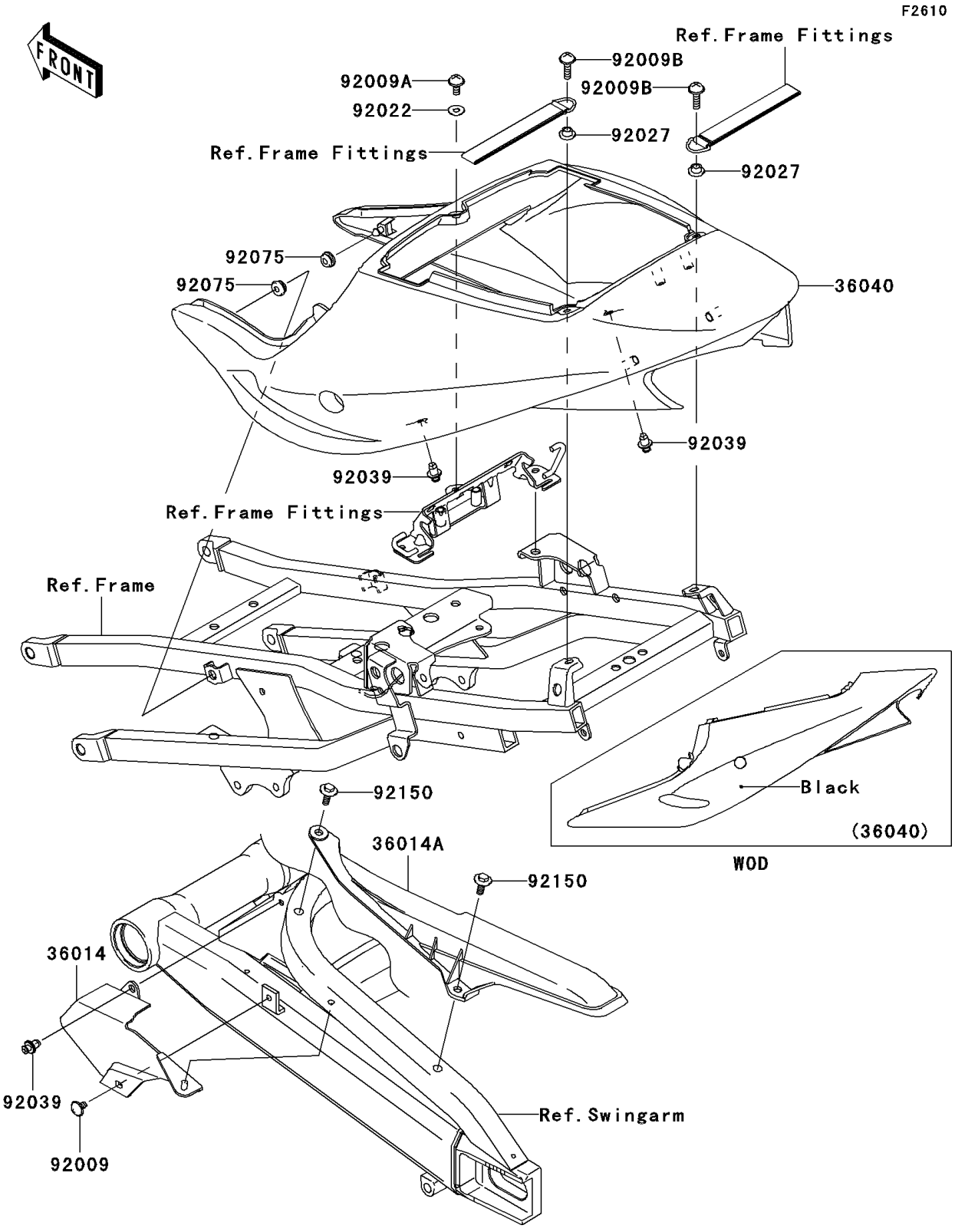

© 2026 Kawasaki Motors Corp., U.S.A.

2002 Ninja® ZX™-9R

PARTS LIST

Side Covers/Chain Cover(ZX900-F1)

ITEM NAME	PART NUMBER	QUANTITY
CASE-CHAIN,FR (Ref # 36014)	36014-1256	1
CASE-CHAIN,RR (Ref # 36014A)	36014-1257	1
COVER-TAIL,BLACK (Ref # 36040)	36040-1061-B5	1
SCREW,6X10 (Ref # 92009)	92009-1661	1
SCREW,6X14 (Ref # 92009A)	92009-1662	1
SCREW,6X22 (Ref # 92009B)	92009-1664	2
WASHER,6.5X16X1 (Ref # 92022)	92022-1143	1
COLLAR,L=6.6 (Ref # 92027)	92027-1181	2
RIVET (Ref # 92039)	92039-1227	3
DAMPER (Ref # 92075)	92075-1011	2
BOLT,6X16 (Ref # 92150)	92150-1198	2

© 2026 Kawasaki Motors Corp., U.S.A.