2026 Z900 ABS

PARTS DIAGRAM

Crankshaft

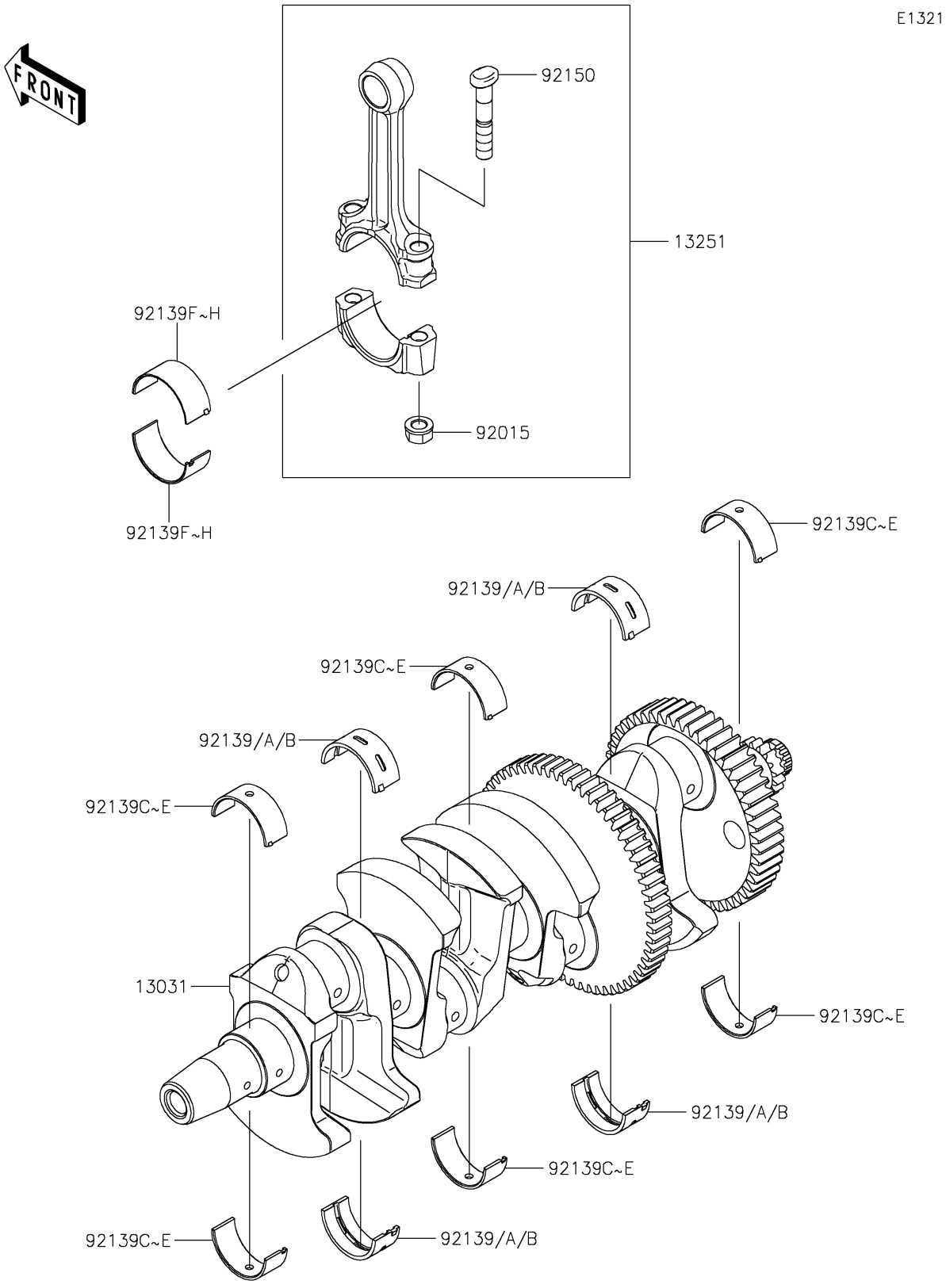

© 2026 Kawasaki Motors Corp., U.S.A.

2026 Z900 ABS

PARTS LIST

Crankshaft

ITEM NAME	PART NUMBER	QUANTITY
CRANKSHAFT-COMP (Ref # 13031)	13031-1575	1
ROD-ASSY-CONNECTING,HH (Ref # 13251)	13251-0761-HH	4
NUT,FLANGED,8MM (Ref # 92015)	92015-1311	8
BUSHING,CRANK #2&#4,RED (Ref # 92139)	92139-1249	AR
BUSHING,CRANK #2&#4,GREEN (Ref # 92139A)	92139-1250	4
BUSHING,CRANK #2&#4,PURPLE (Ref # 92139B)	92139-1251	AR
BUSHING,CRANK,#1&#3&#5,RED (Ref # 92139C)	92139-1252	AR
BUSHING,CRANK,#1&#3&#5,GREEN (Ref # 92139D)	92139-1253	6
BUSHING,CRANK,#1&#3&#5,PURPLE (Ref # 92139E)	92139-1254	AR
BUSHING,PIN,RED (Ref # 92139F)	92139-1255	AR
BUSHING,PIN,GREEN (Ref # 92139G)	92139-1256	8
BUSHING,PIN,PURPLE (Ref # 92139H)	92139-1257	AR
BOLT,CONNECTING ROD,8MM (Ref # 92150)	92150-1216	8

© 2026 Kawasaki Motors Corp., U.S.A.