2002 Ninja® ZX™-9R

PARTS DIAGRAM

Brake Pedal/Torque Link

F2260

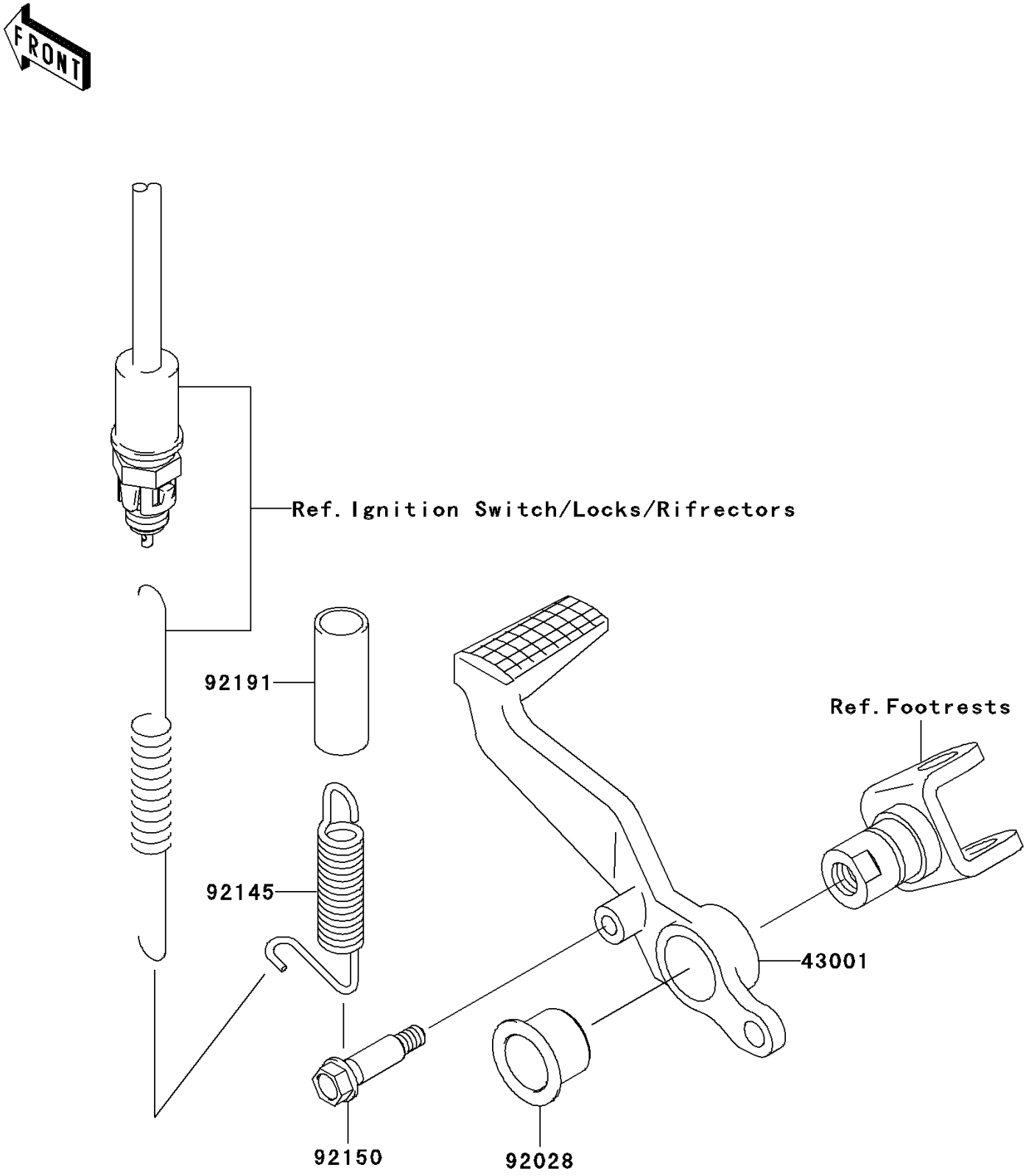

© 2026 Kawasaki Motors Corp., U.S.A.

2002 Ninja® ZX™-9R

PARTS LIST

Brake Pedal/Torque Link

ITEM NAME	PART NUMBER	QUANTITY
LEVER-BRAKE,PEDAL (Ref # 43001)	43001-1393	1
BUSHING (Ref # 92028)	92028-1576	1
SPRING,BRAKE PEDAL RETURN (Ref # 92145)	92145-1090	1
BOLT (Ref # 92150)	92150-1439	1
TUBE,12X15X40 (Ref # 92191)	92191-1739	1

© 2026 Kawasaki Motors Corp., U.S.A.