2002 Ninja® ZX™-9R

PARTS DIAGRAM

Tires

F2210



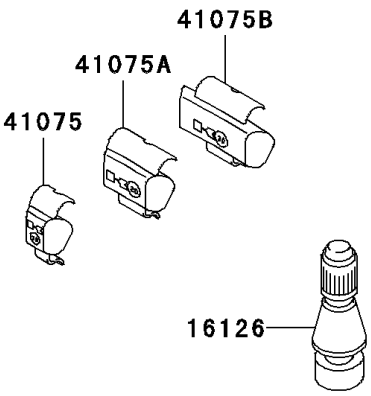





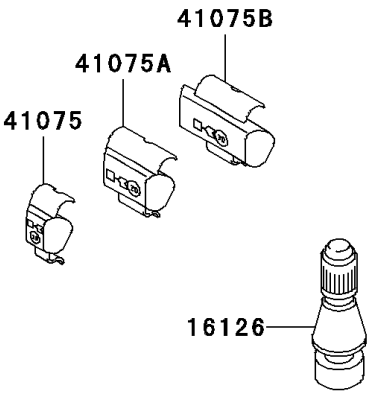

© 2026 Kawasaki Motors Corp., U.S.A.

2002 Ninja® ZX™-9R

PARTS LIST

Tires

ITEM NAME	PART NUMBER	QUANTITY
VALVE,TIRE (Ref # 16126)	16126-1140	2
TIRE,FR,120/70ZR17(58W),BT012F (Ref # 41009)	41009-1400	1
TIRE,RR,190/50ZR17(73W),BT012R (Ref # 41009A)	41009-1401	1
BALANCER-WHEEL,10G,SILVER (Ref # 41075)	41075-1014	AR
BALANCER-WHEEL,20G,SILVER (Ref # 41075A)	41075-1015	AR
BALANCER-WHEEL,30G,SILVER (Ref # 41075B)	41075-1016	AR

© 2026 Kawasaki Motors Corp., U.S.A.