2002 Ninja® ZX™-9R

PARTS DIAGRAM

Stand(s)

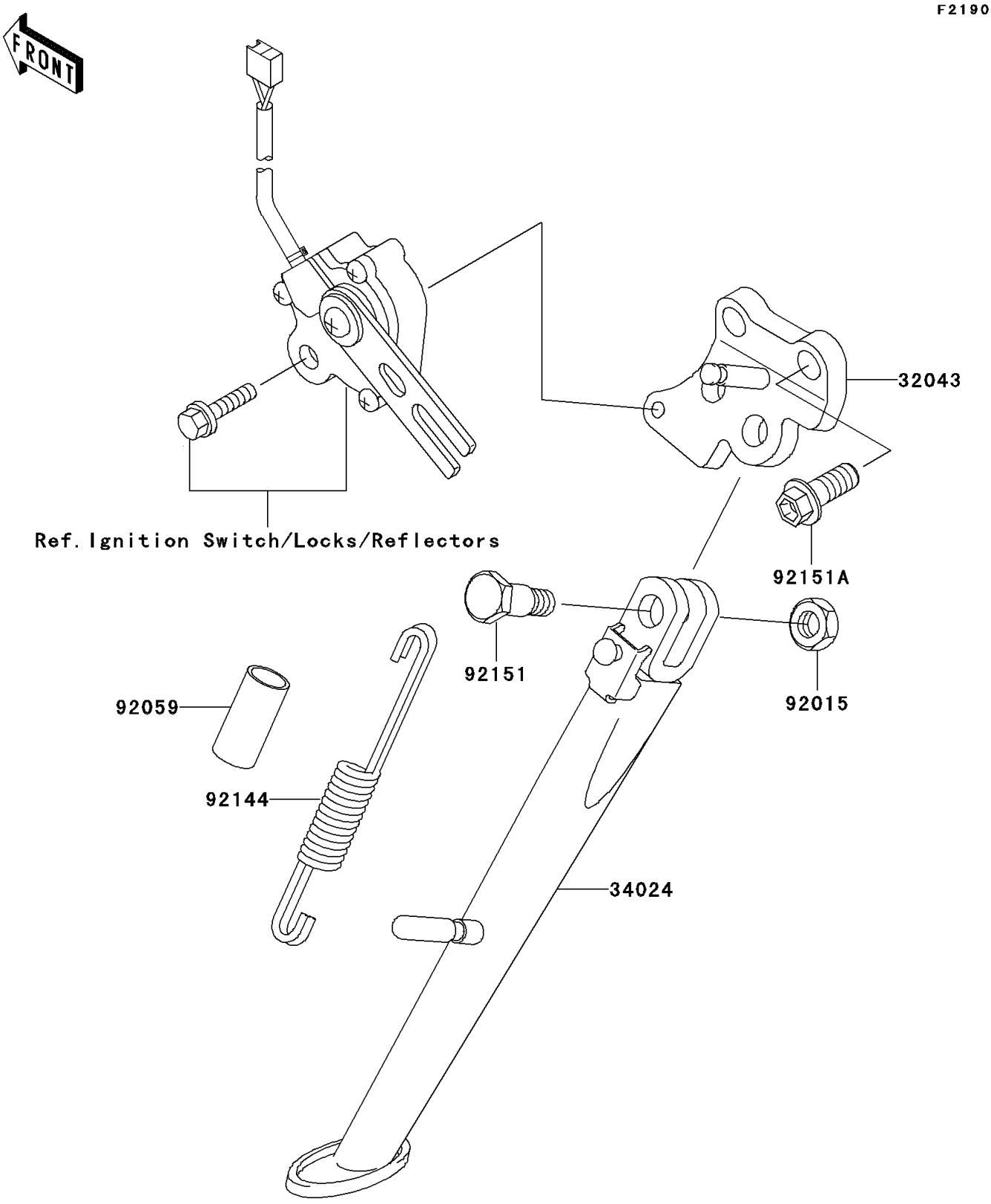

© 2026 Kawasaki Motors Corp., U.S.A.

2002 Ninja® ZX™-9R

PARTS LIST

Stand(s)

ITEM NAME	PART NUMBER	QUANTITY
BRACKET-STAND,SIDE,BLACK (Ref # 32043)	32043-1435-10	1
STAND-SIDE (Ref # 34024)	34024-1399	1
NUT,LOCK,10MM,BLACK (Ref # 92015)	92015-1188	1
TUBE,14X17X50 (Ref # 92059)	92059-1961	1
SPRING,SIDE STAND (Ref # 92144)	92144-1818	1
BOLT,SIDE STAND (Ref # 92151)	92151-1797	1
BOLT,FLANGED,10X25 (Ref # 92151A)	92151-1802	2

© 2026 Kawasaki Motors Corp., U.S.A.