2003 Ninja® ZX™-9R

PARTS DIAGRAM

Footrests

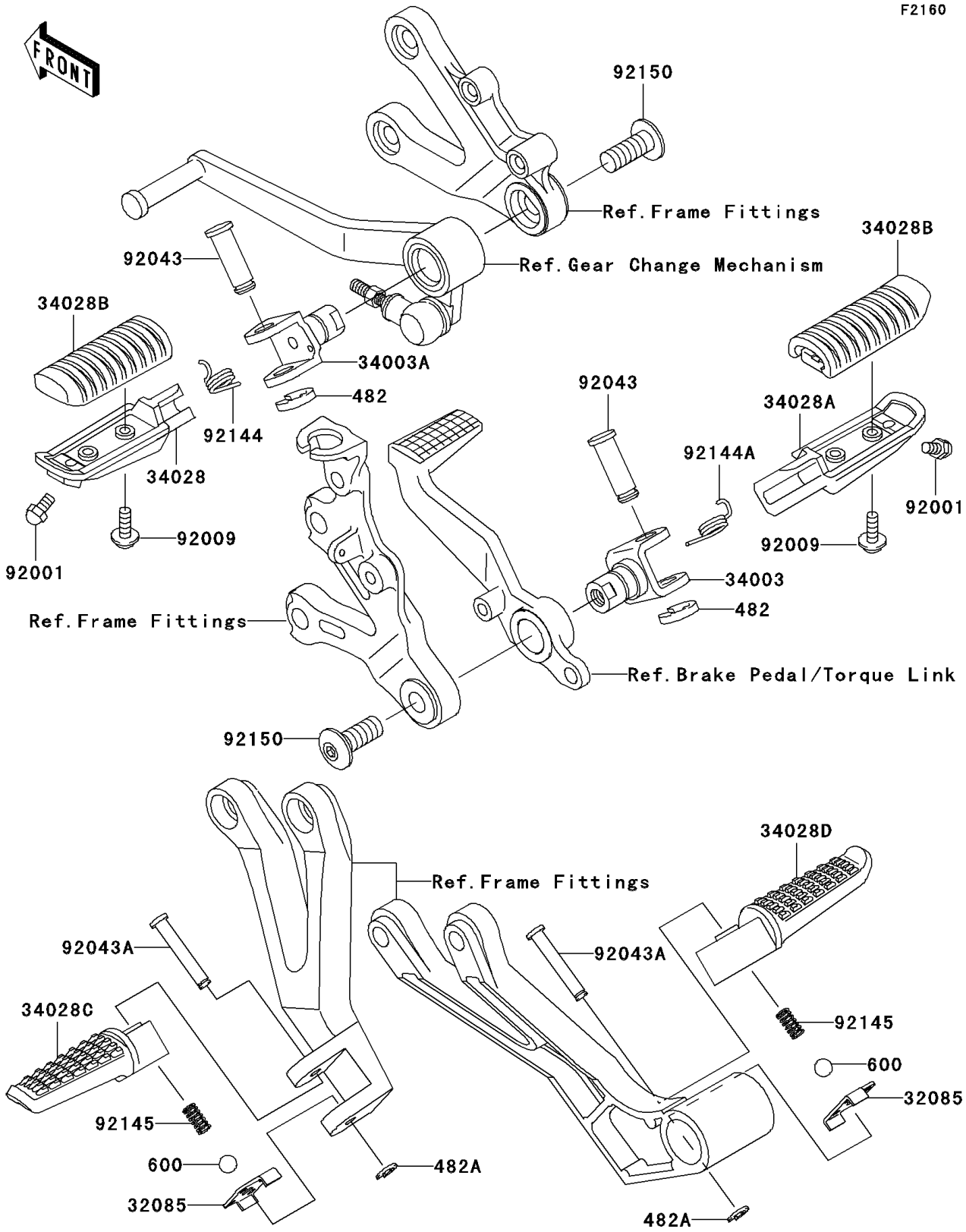

© 2026 Kawasaki Motors Corp., U.S.A.

2003 Ninja® ZX™-9R

PARTS LIST

Footrests

ITEM NAME	PART NUMBER	QUANTITY
CIRCLIP-TYPE-E,10MM (Ref # 482)	482L0100	2
CIRCLIP-TYPE-E,5MM (Ref # 482A)	482L5000	2
BALL-STEEL,1/4" (Ref # 600)	600A0800	2
STOPPER,REAR STEP (Ref # 32085)	32085-1496	2
HOLDER-STEP (Ref # 34003)	34003-1327	1
HOLDER-STEP (Ref # 34003A)	34003-1474	1
STEP,FR,LH (Ref # 34028)	34028-1428	1
STEP,FR,RH (Ref # 34028A)	34028-1429	1
STEP,FR,RUBBER (Ref # 34028B)	34028-1430	2
STEP,RR,LH (Ref # 34028C)	34028-1480	1
STEP,RR,RH (Ref # 34028D)	34028-1481	1
BOLT,BANK SENSOR (Ref # 92001)	92001-1905	2
SCREW,5X14 (Ref # 92009)	92009-1404	4
PIN,12X37 (Ref # 92043)	92043-1144	2
PIN,6X40 (Ref # 92043A)	92043-1595	2
SPRING,STEP RETURN,LH (Ref # 92144)	92144-1567	1
SPRING,STEP RETURN (Ref # 92144A)	92144-1568	1
SPRING (Ref # 92145)	92145-1319	2
BOLT,SOCKET,10X25 (Ref # 92150)	92150-1268	2

© 2026 Kawasaki Motors Corp., U.S.A.