2003 Ninja® ZX™-9R

PARTS DIAGRAM

Rear Suspension

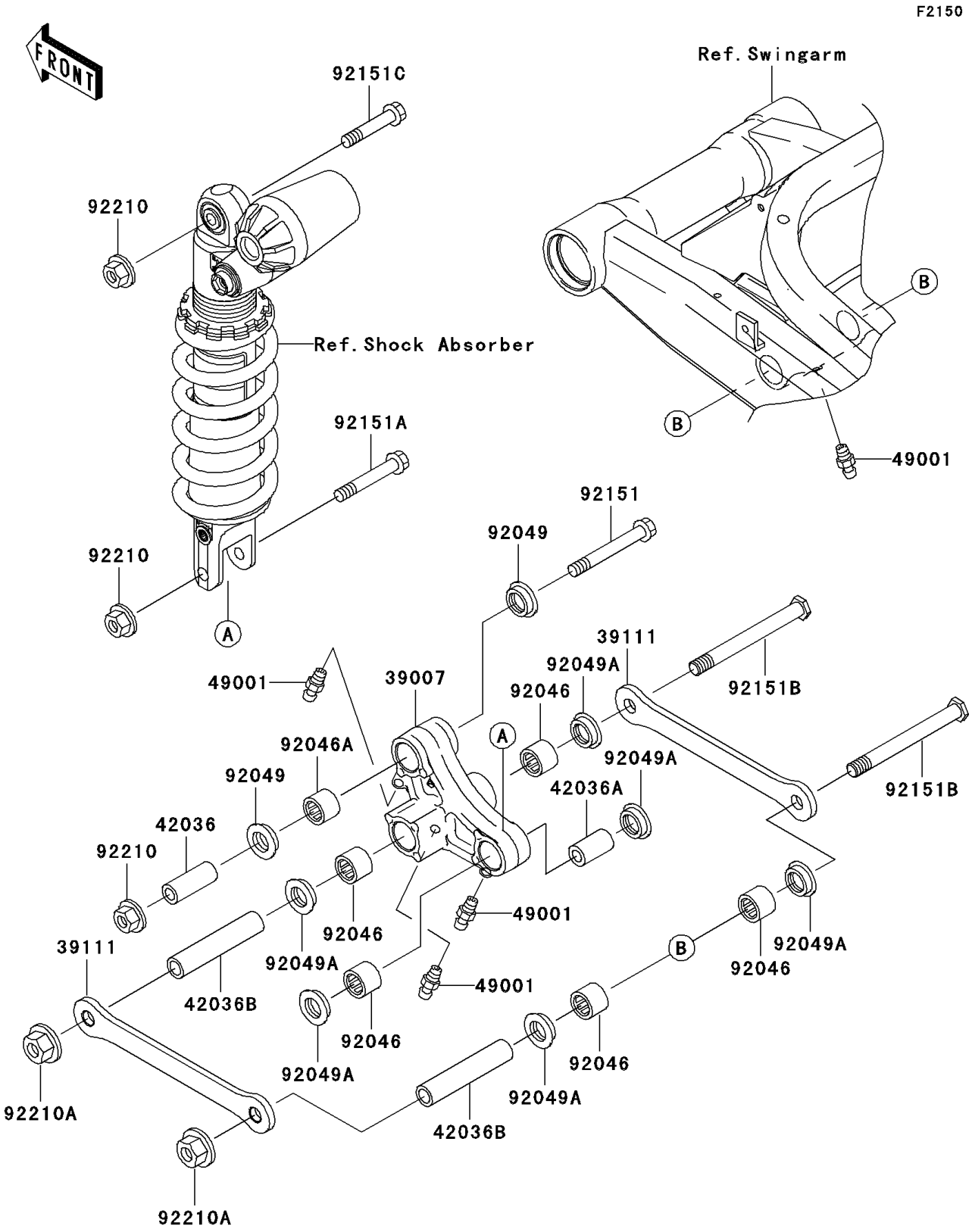

© 2026 Kawasaki Motors Corp., U.S.A.

2003 Ninja® ZX™-9R

PARTS LIST

Rear Suspension

ITEM NAME	PART NUMBER	QUANTITY
ARM-SUSP,UNI TRAK (Ref # 39007)	39007-1302	1
ROD-TIE,SUSPENSION (Ref # 39111)	39111-1177	2
SLEEVE,10.1X17X44.5 (Ref # 42036)	42036-1342	1
SLEEVE,10.1X18X32 (Ref # 42036A)	42036-1344	1
SLEEVE,12.1X18X90 (Ref # 42036B)	42036-1360	2
NIPPLE-GREASE (Ref # 49001)	49001-1051	4
BEARING-NEEDLE,SFYZM182417 (Ref # 92046)	92046-1272	5
BEARING-NEEDLE,SFYZM172425 (Ref # 92046A)	92046-1273	1
SEAL-OIL,MHA17245.7F (Ref # 92049)	92049-1223	2
SEAL-OIL,KCR MF018N1 (Ref # 92049A)	92049-1493	6
BOLT,FLANGED,10X77 (Ref # 92151)	92151-1600	1
BOLT,FLANGED,10X62 (Ref # 92151A)	92151-1601	1
BOLT,12X117 (Ref # 92151B)	92151-1684	2
BOLT,FLANGED,10X51 (Ref # 92151C)	92151-1798	1
NUT,LOCK,FLANGED,10MM (Ref # 92210)	92210-1139	3
NUT,LOCK,FLANGED,12MM (Ref # 92210A)	92210-1150	2

© 2026 Kawasaki Motors Corp., U.S.A.