2002 Ninja® ZX™-9R

PARTS DIAGRAM

Starter Motor

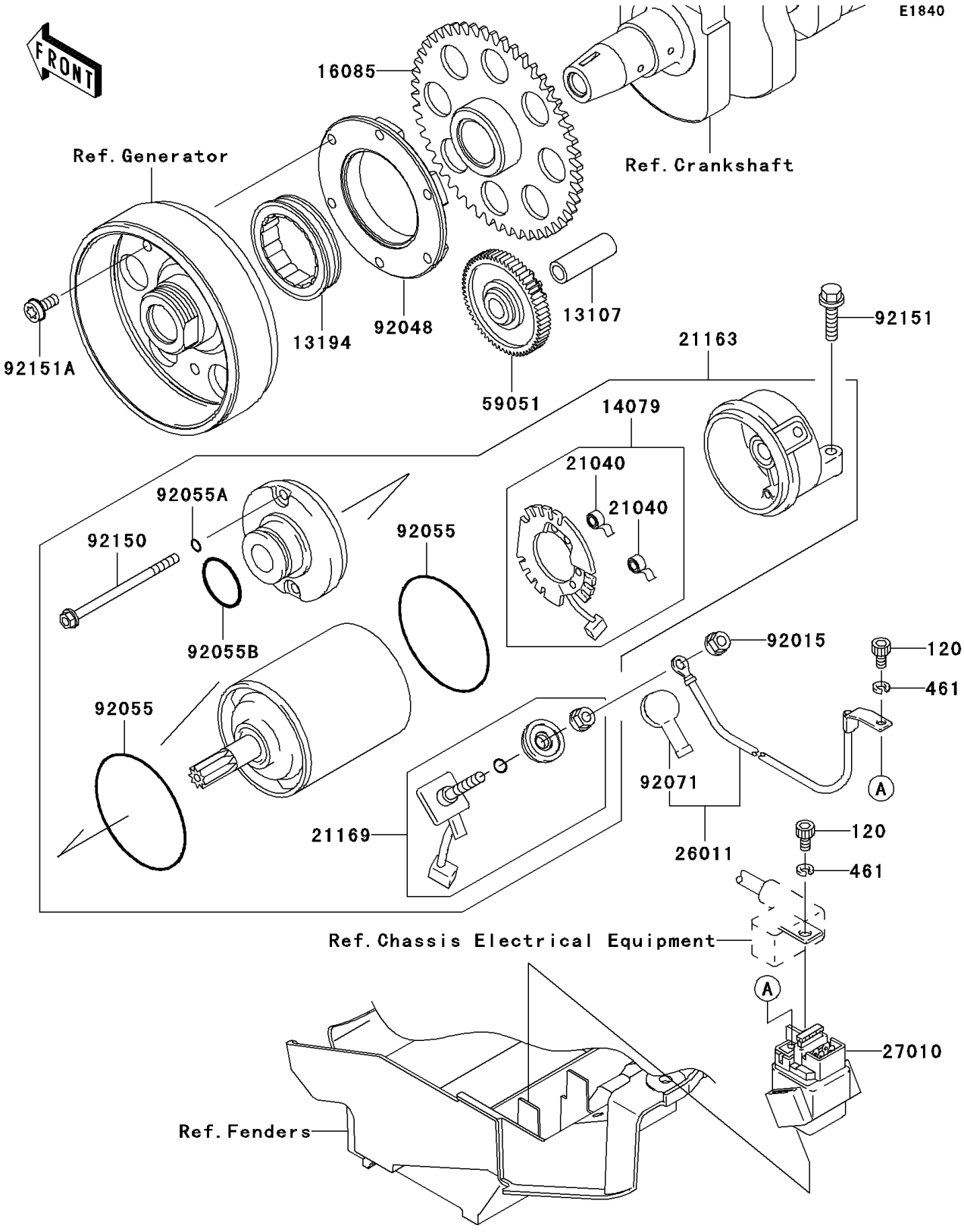

© 2026 Kawasaki Motors Corp., U.S.A.

2002 Ninja® ZX™-9R

PARTS LIST

Starter Motor

ITEM NAME	PART NUMBER	QUANTITY
BOLT-SOCKET (Ref # 120)	120S0510	2
WASHER-SPRING,5MM,BLACK (Ref # 461)	461K0500	2
SHAFT,IDLER GEAR (Ref # 13107)	13107-1377	1
CLUTCH-ONEWAY (Ref # 13194)	13194-1096	1
HOLDER-ASSY,CARBON BRUSH (Ref # 14079)	14079-1082	1
GEAR,CLUTCH ONEWAY (Ref # 16085)	16085-1303	1
SPRING-BRUSH (Ref # 21040)	21040-1051	2
STARTER-ELECTRIC (Ref # 21163)	21163-1288	1
TERMINAL,STARTER (Ref # 21169)	21169-1058	1
WIRE-LEAD,STARTER (Ref # 26011)	26011-1689	1
SWITCH (Ref # 27010)	27010-1380	1
GEAR-SPUR,IDLER (Ref # 59051)	59051-1343	1
NUT (Ref # 92015)	92015-1623	1
RACE,CLUTCH ONEWAY (Ref # 92048)	92048-1102	1
RING-O,62MM (Ref # 92055)	92055-1260	2
RING-O,4.5MM (Ref # 92055A)	92055-1261	2
RING-O,24.4MM (Ref # 92055B)	92055-1262	1
GROMMET,STARTER TERMINAL (Ref # 92071)	92071-1120	1
BOLT (Ref # 92150)	92150-1237	2
BOLT,6X25 (Ref # 92151)	92151-1130	2
BOLT,6X14 (Ref # 92151A)	92151-1335	6

© 2026 Kawasaki Motors Corp., U.S.A.