2002 Ninja® ZX™-9R

PARTS DIAGRAM

Oil Pan

E1434

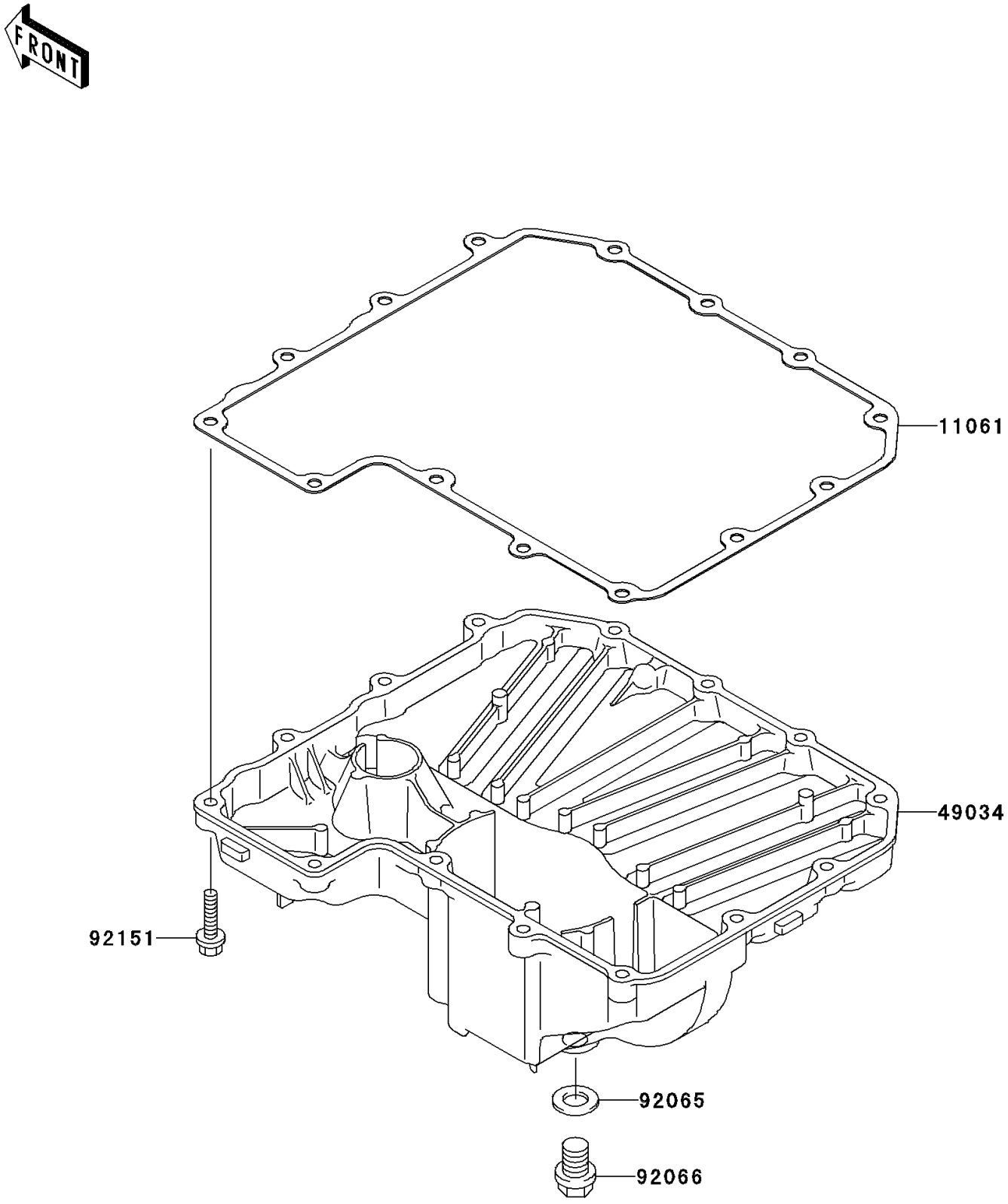

© 2026 Kawasaki Motors Corp., U.S.A.

2002 Ninja® ZX™-9R

PARTS LIST

Oil Pan

ITEM NAME	PART NUMBER	QUANTITY
GASKET,OIL PAN (Ref # 11061)	11061-1143	1
PAN-OIL (Ref # 49034)	49034-1144	1
GASKET,12X22X2,DRAIN PLUG (Ref # 92065)	92065-097	1
PLUG,OIL DRAIN,12X15 (Ref # 92066)	92066-1174	1
BOLT,6X25 (Ref # 92151)	92151-1546	14

© 2026 Kawasaki Motors Corp., U.S.A.