2026 KLR®650 S ABS

PARTS DIAGRAM

Ignition Switch

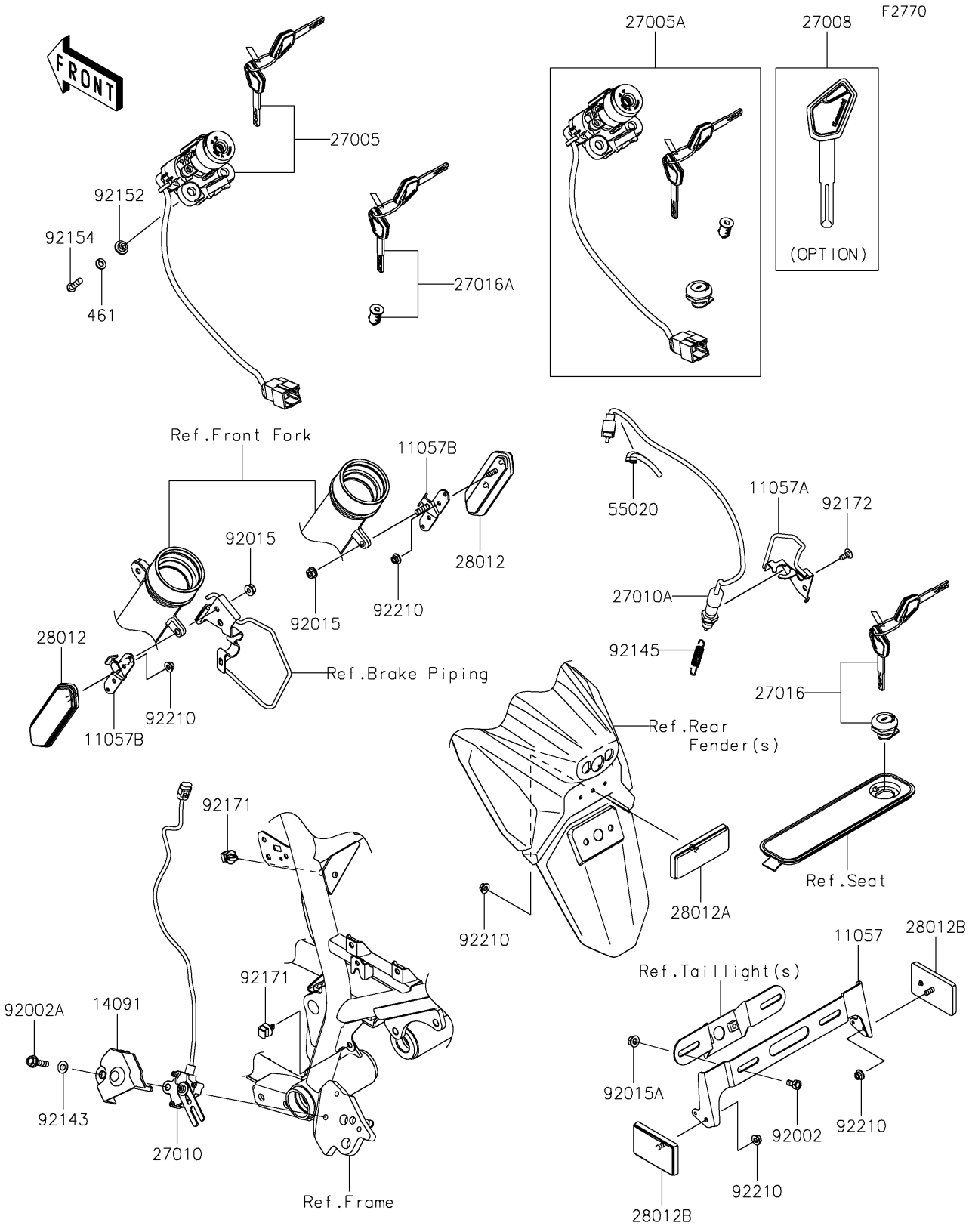

© 2026 Kawasaki Motors Corp., U.S.A.

2026 KLR®650 S ABS

PARTS LIST

Ignition Switch

ITEM NAME	PART NUMBER	QUANTITY
BRACKET,REFLECTOR,RR (Ref # 11057)	11057-4368	1
BRACKET,RR BRAKE SWITCH (Ref # 11057A)	11057-7880	1
BRACKET,REFLECTOR (Ref # 11057B)	11057-7911	2
COVER,SIDE STAND SWITCH (Ref # 14091)	14091-1553	1
SWITCH-ASSY-IGNITION (Ref # 27005)	27005-0702	1
SWITCH-ASSY-IGNITION (Ref # 27005A)	27005-5189	1
KEY-LOCK,BLANK (Ref # 27008)	27008-0688	1
SWITCH,SIDE STAND (Ref # 27010)	27010-0118	1
SWITCH,REAR BRAKE (Ref # 27010A)	27010-0969	1
LOCK-ASSY,TOOL COVER (Ref # 27016)	27016-5419	1
LOCK-ASSY,TANK CAP (Ref # 27016A)	27016-5421	1
REFLECTOR-REFLEX,CCC (Ref # 28012)	28012-0045	2
REFLECTOR-REFLEX (Ref # 28012A)	28012-1077	1
REFLECTOR-REFLEX (Ref # 28012B)	28012-1088	2
GUARD,50X30 (Ref # 55020)	55020-2334	1
BOLT,6X12 (Ref # 92002)	92002-1132	2
BOLT,FLANGED,6X25 (Ref # 92002A)	92002-1582	1
NUT,FLANGED,6MM,BLACK (Ref # 92015)	92015-1233	2
NUT,FLANGED,6MM (Ref # 92015A)	92015-1367	2
COLLAR (Ref # 92143)	92143-1331	1
SPRING,REAR BRAKE (Ref # 92145)	92145-1896	1
COLLAR,6.15X10.15X6 (Ref # 92152)	92152-1535	2
BOLT,TORX,6X22 (Ref # 92154)	92154-1858	2
CLAMP (Ref # 92171)	92171-0640	2
SCREW,5X12 (Ref # 92172)	92172-1459	1
NUT,FLANGED,5MM (Ref # 92210)	92210-0007	5
WASHER-SPRING,6MM (Ref # 461)	461DA0600	2

© 2026 Kawasaki Motors Corp., U.S.A.