2002 Ninja® ZX™-9R

PARTS DIAGRAM

Clutch

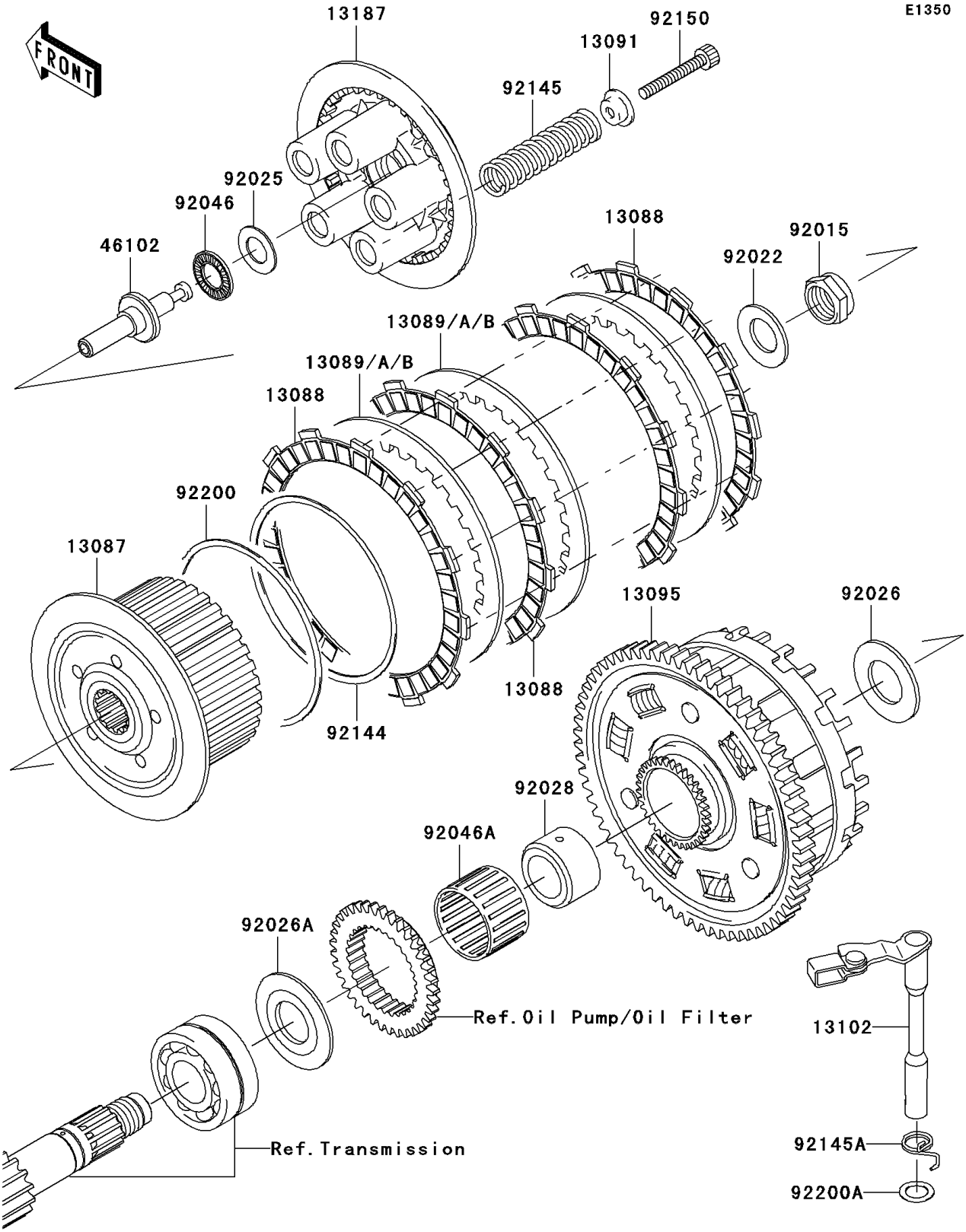

© 2026 Kawasaki Motors Corp., U.S.A.

2002 Ninja® ZX™-9R

PARTS LIST

Clutch

ITEM NAME	PART NUMBER	QUANTITY
HUB-CLUTCH (Ref # 13087)	13087-1173	1
PLATE-FRICTION (Ref # 13088)	13088-1124	10
PLATE-CLUTCH,T=2.0 (Ref # 13089)	13089-1073	AR
PLATE-CLUTCH,T=2.3 (Ref # 13089A)	13089-1084	9
PLATE-CLUTCH,T=2.6 (Ref # 13089B)	13089-1115	AR
HOLDER,CLUTCH SPRING (Ref # 13091)	13091-1041	5
HOUSING-COMP-CLUTCH (Ref # 13095)	13095-1417	1
RELEASE-COMP-CLUTCH (Ref # 13102)	13102-1140	1
PLATE-CLUTCH OPERATING (Ref # 13187)	13187-1083	1
ROD (Ref # 46102)	46102-1425	1
NUT,20MM (Ref # 92015)	92015-1555	1
WASHER (Ref # 92022)	92022-1868	1
SHIM,15.3X27.5X1.20 (Ref # 92025)	92025-1137	1
SPACER,25.5X47X2.5 (Ref # 92026)	92026-022	1
SPACER (Ref # 92026A)	92026-1497	1
BUSHING (Ref # 92028)	92028-1741	1
BEARING-NEEDLE,AXK1102 (Ref # 92046)	92046-1052	1
BEARING-NEEDLE (Ref # 92046A)	92046-1231	1
SPRING,FRICTION PLATE (Ref # 92144)	92144-1854	1
SPRING,CLUTCH (Ref # 92145)	92145-1364	5
SPRING,CLUTCH RELEASE (Ref # 92145A)	92145-1468	1
BOLT,CLUTCH OPERATING (Ref # 92150)	92150-1855	5
WASHER,FRICTION PLATE (Ref # 92200)	92200-1260	1
WASHER,12X18.5X0.5 (Ref # 92200A)	92200-1487	1

© 2026 Kawasaki Motors Corp., U.S.A.