# 2002 Ninja® ZX™-9R

## PARTS DIAGRAM

### Muffler(s)

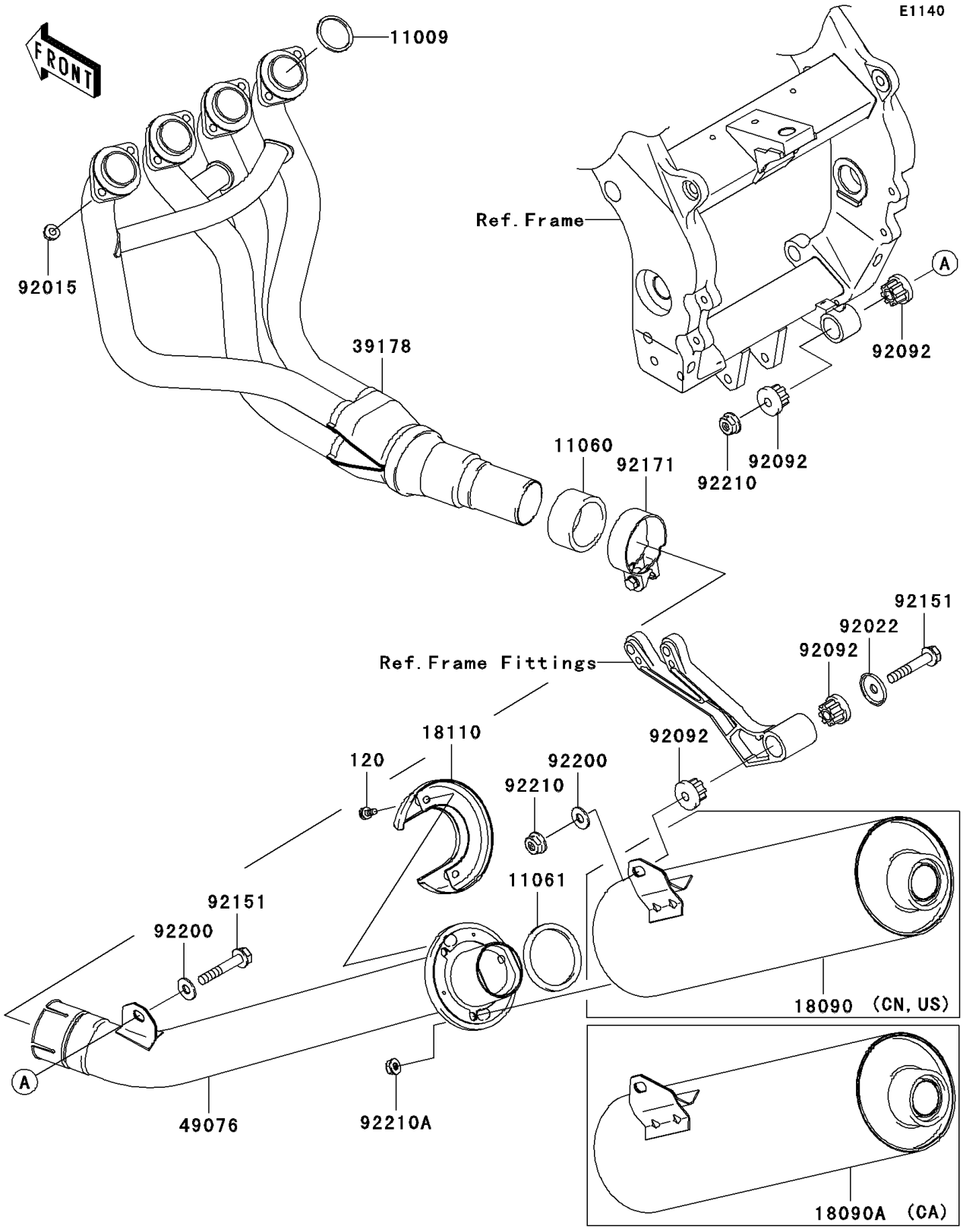


© 2026 Kawasaki Motors Corp., U.S.A.

# 2002 Ninja® ZX™-9R

## PARTS LIST

### Muffler(s)

| ITEM NAME | PART NUMBER | QUANTITY |
|---|---|---|
| BOLT-SOCKET (Ref # 120) | 120R0610 | 2 |
| GASKET,EXHAUST PIPE HOLDER (Ref # 11009) | 11009-1840 | 4 |
| GASKET (Ref # 11060) | 11060-1971 | 1 |
| GASKET (Ref # 11061) | 11061-1107 | 1 |
| BODY END-MUFFLER (Ref # 18110) | 18110-1168 | 1 |
| MANIFOLD-COMP-EXHAUST (Ref # 39178) | 39178-1340 | 1 |
| PIPE-ASSY-EXHAUST (Ref # 49076) | 49076-1058 | 1 |
| NUT,8MM (Ref # 92015) | 92015-1402 | 8 |
| WASHER (Ref # 92022) | 92022-289 | 1 |
| BUSHING-RUBBER,MUFFLER (Ref # 92092) | 92092-1013 | 4 |
| BOLT,10X57 (Ref # 92151) | 92151-1771 | 2 |
| CLAMP (Ref # 92171) | 92171-1194 | 1 |
| WASHER,10.5X25X2.0 (Ref # 92200) | 92200-1377 | 2 |
| NUT,10MM (Ref # 92210) | 92210-1102 | 2 |
| NUT,8MM (Ref # 92210A) | 92210-1114 | 3 |
| BODY-COMP-MUFFLER (Ref # 18090) | 18090-1945 | 1 |
| BODY-COMP-MUFFLER (Ref # 18090A) | 18090-1947 | 1 |

© 2026 Kawasaki Motors Corp., U.S.A.