2026 KLR650 Adventure ABS

PARTS DIAGRAM

Ignition System

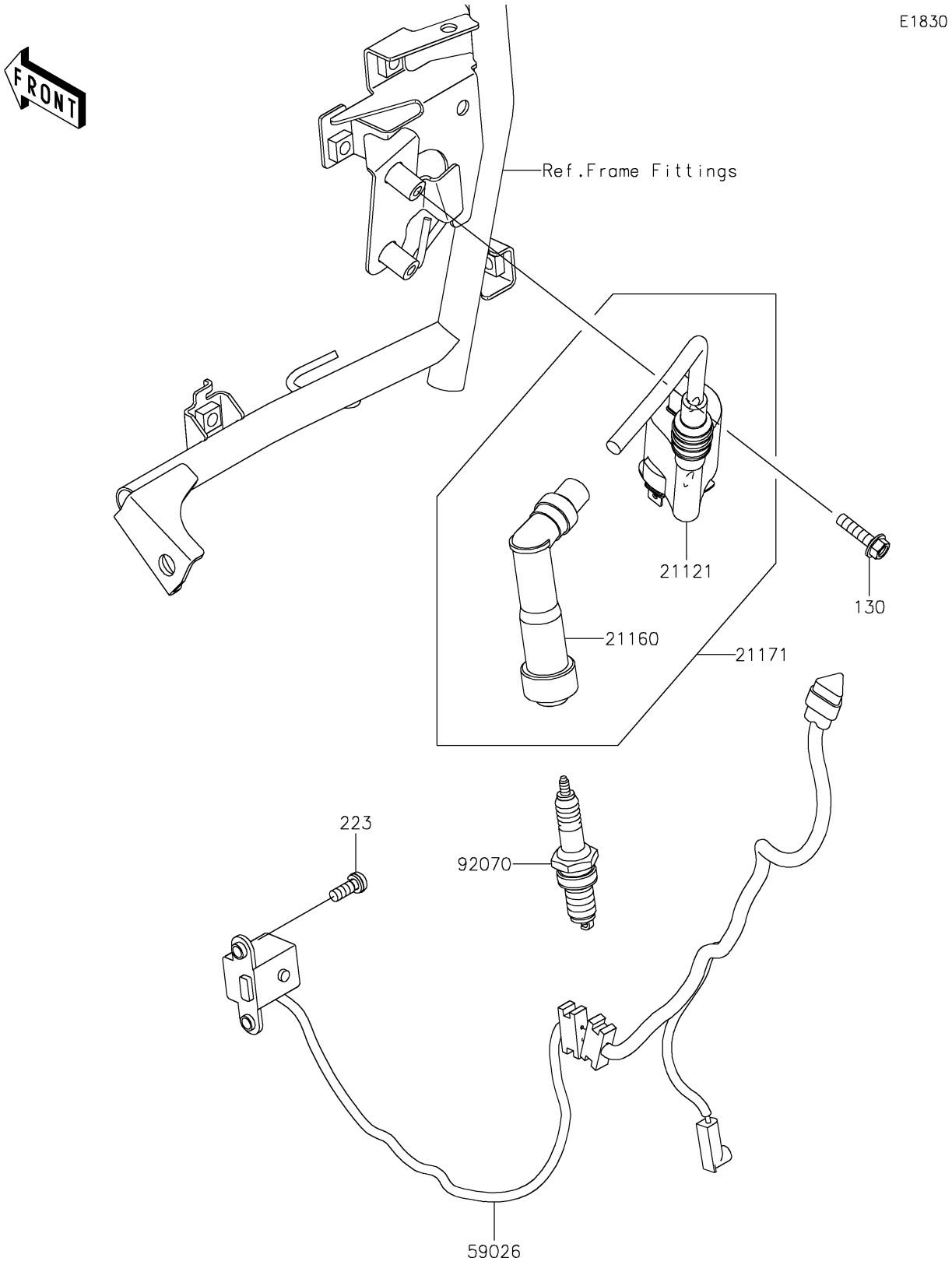

© 2026 Kawasaki Motors Corp., U.S.A.

2026 KLR650 Adventure ABS

PARTS LIST

Ignition System

ITEM NAME	PART NUMBER	QUANTITY
COIL-IGNITION (Ref # 21121)	21121-0740	1
CAP-ASSY-PLUG (Ref # 21160)	21160-0019	1
COIL-ASSY-IGNITION (Ref # 21171)	21171-0789	1
COIL-PULSING (Ref # 59026)	59026-0563	1
PLUG-SPARK,DPR8EA-9(NGK) (Ref # 92070)	92070-1065	1
BOLT-FLANGED,5X20 (Ref # 130)	130BA0520	2
SCREW-PAN-WS-CROS,5X14 (Ref # 223)	223AA0514	2

© 2026 Kawasaki Motors Corp., U.S.A.