2026 KLR650 Adventure ABS

PARTS DIAGRAM

Cylinder/Piston(s)

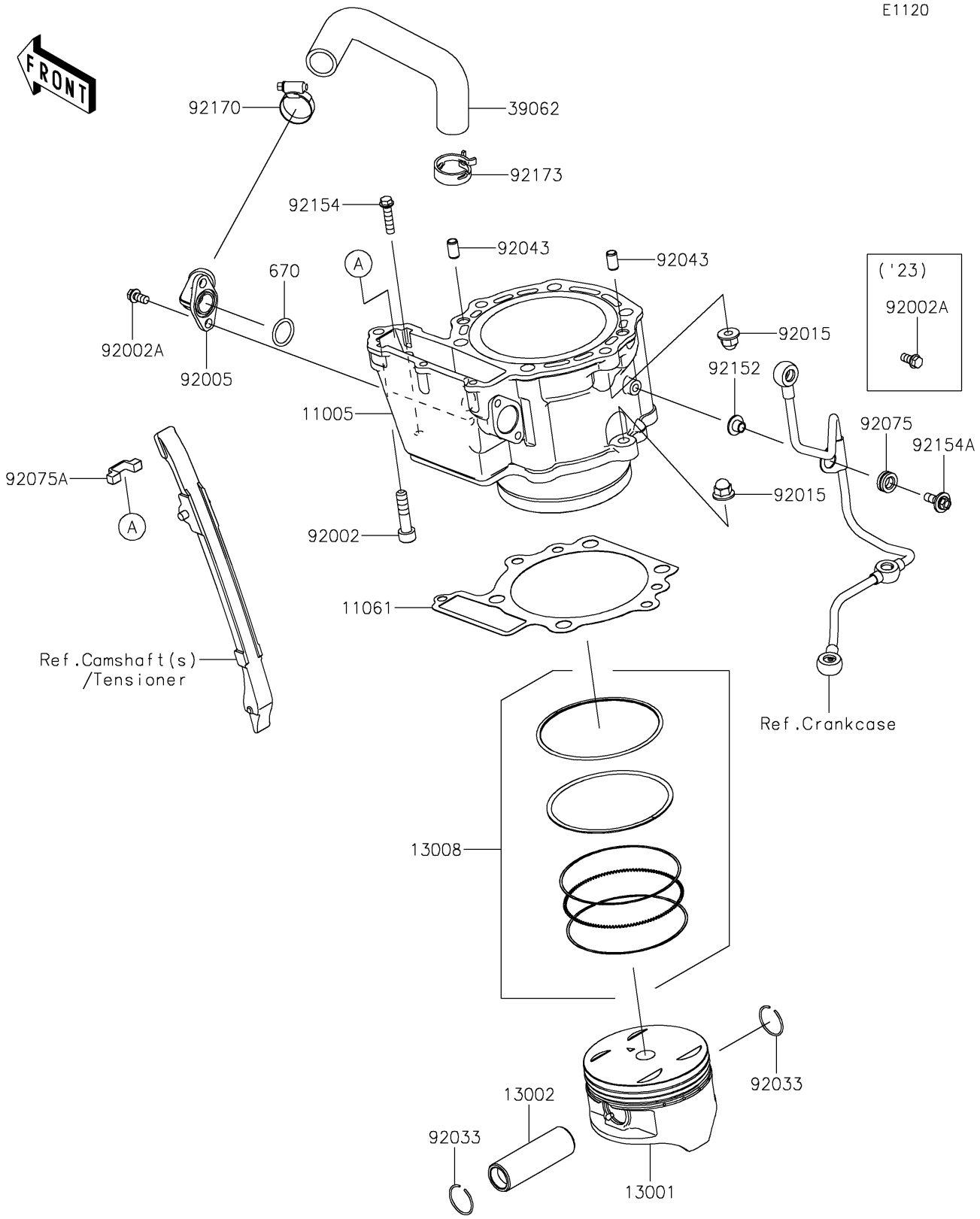

© 2026 Kawasaki Motors Corp., U.S.A.

2026 KLR650 Adventure ABS

PARTS LIST

Cylinder/Piston(s)

ITEM NAME	PART NUMBER	QUANTITY

© 2026 Kawasaki Motors Corp., U.S.A.