2025 Z900 SE ABS

PARTS DIAGRAM

Accessory(Seat)

F2910E

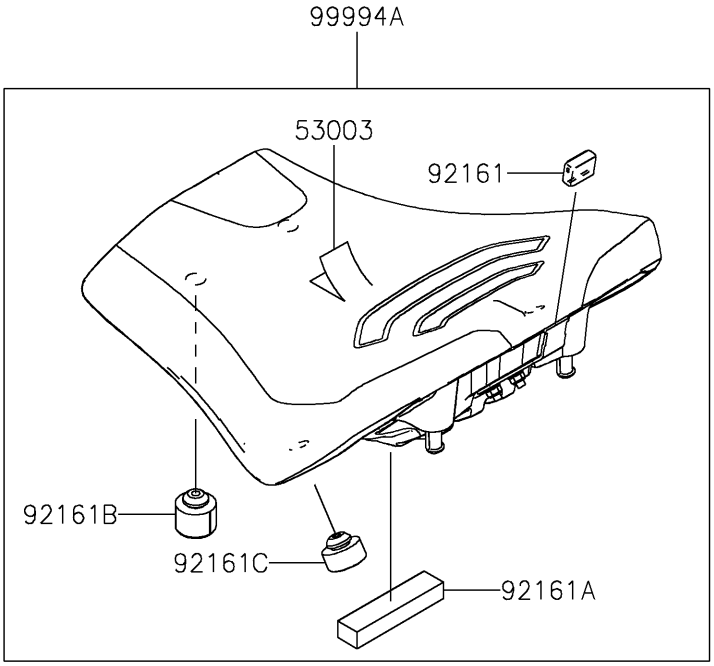

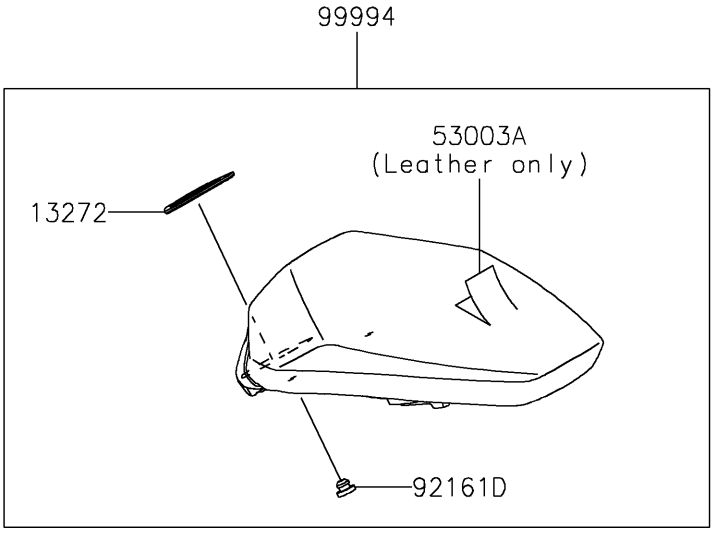

© 2026 Kawasaki Motors Corp., U.S.A.

2025 Z900 SE ABS

PARTS LIST

Accessory(Seat)

ITEM NAME	PART NUMBER	QUANTITY
PLATE (Ref # 13272)	13272-4452	1
LEATHER,BLACK+GRY (Ref # 53003)	53003-0720-77H	1
LEATHER,BLACK (Ref # 53003A)	53003-0721-MA	1
DAMPER,SEAT BRACKET,FR (Ref # 92161)	92161-1865	1
DAMPER,20X90X15 (Ref # 92161A)	92161-1867	1
DAMPER,14X30X22 (Ref # 92161B)	92161-1969	2
DAMPER,14X30X14.5 (Ref # 92161C)	92161-1970	2
DAMPER (Ref # 92161D)	92161-2308	2
COMFORT SEAT,RR,BLACK+BLK (Ref # 99994)	99994-2151-12Y	1
HIGH SEAT,FR,BLACK+GRY (Ref # 99994A)	99994-2254-77H	1

© 2026 Kawasaki Motors Corp., U.S.A.