2025 NINJA® 1100SX SE ABS

PARTS DIAGRAM

Rear Brake

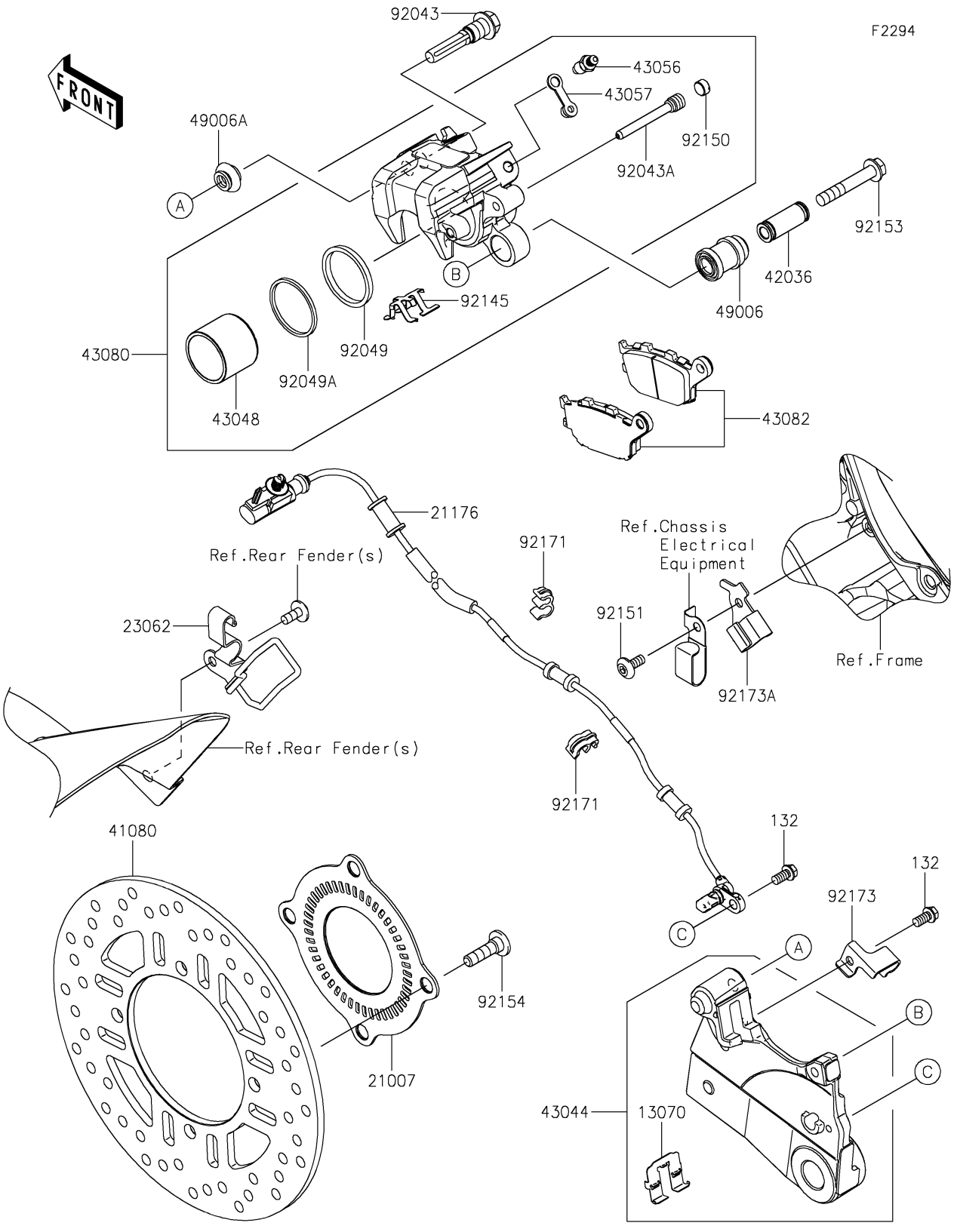

© 2026 Kawasaki Motors Corp., U.S.A.

2025 NINJA® 1100SX SE ABS

PARTS LIST

Rear Brake

ITEM NAME	PART NUMBER	QUANTITY
GUIDE,BRAKE PAD (Ref # 13070)	13070-0076	1
ROTOR,SENSOR,RR (Ref # 21007)	21007-0682	1
SENSOR,RR WHEEL SPEED (Ref # 21176)	21176-1214	1
BRACKET-COMP,RR FENDER (Ref # 23062)	23062-1570	1
DISC,RR (Ref # 41080)	41080-0718	1
SLEEVE (Ref # 42036)	42036-0050	1
HOLDER-COMP-CALIPER,RR (Ref # 43044)	43044-0101	1
PISTON-CALIPER (Ref # 43048)	43048-0008	1
BREATHER (Ref # 43056)	43056-1055	1
CAP-BREATHER (Ref # 43057)	43057-1001	1
CALIPER-SUB-ASSY,RR,BLACK (Ref # 43080)	43080-0050-DJ	1
PAD-ASSY-BRAKE (Ref # 43082)	43082-0073	1
BOOT (Ref # 49006)	49006-0058	1
BOOT,CALIPER (Ref # 49006A)	49006-1242	1
PIN (Ref # 92043)	92043-0137	1
PIN,HANGER (Ref # 92043A)	92043-1520	1
SEAL-OIL (Ref # 92049)	92049-1449	1
SEAL-OIL (Ref # 92049A)	92049-1450	1
SPRING,PAD (Ref # 92145)	92145-0493	1
BOLT,PLUG (Ref # 92150)	92150-1692	1
BOLT,SOCKET,6X14 (Ref # 92151)	92151-1654	1
BOLT,FLANGED (Ref # 92153)	92153-1826	1
BOLT,SOCKET,8X30 (Ref # 92154)	92154-1865	4
CLAMP (Ref # 92171)	92171-0921	2
CLAMP (Ref # 92173)	92173-1798	1
CLAMP (Ref # 92173A)	92173-2860	1
BOLT-FLANGED-SMALL,6X12 (Ref # 132)	132BB0612	2

© 2026 Kawasaki Motors Corp., U.S.A.