2026 NINJA® 1100SX SE ABS

PARTS DIAGRAM

Front Wheel

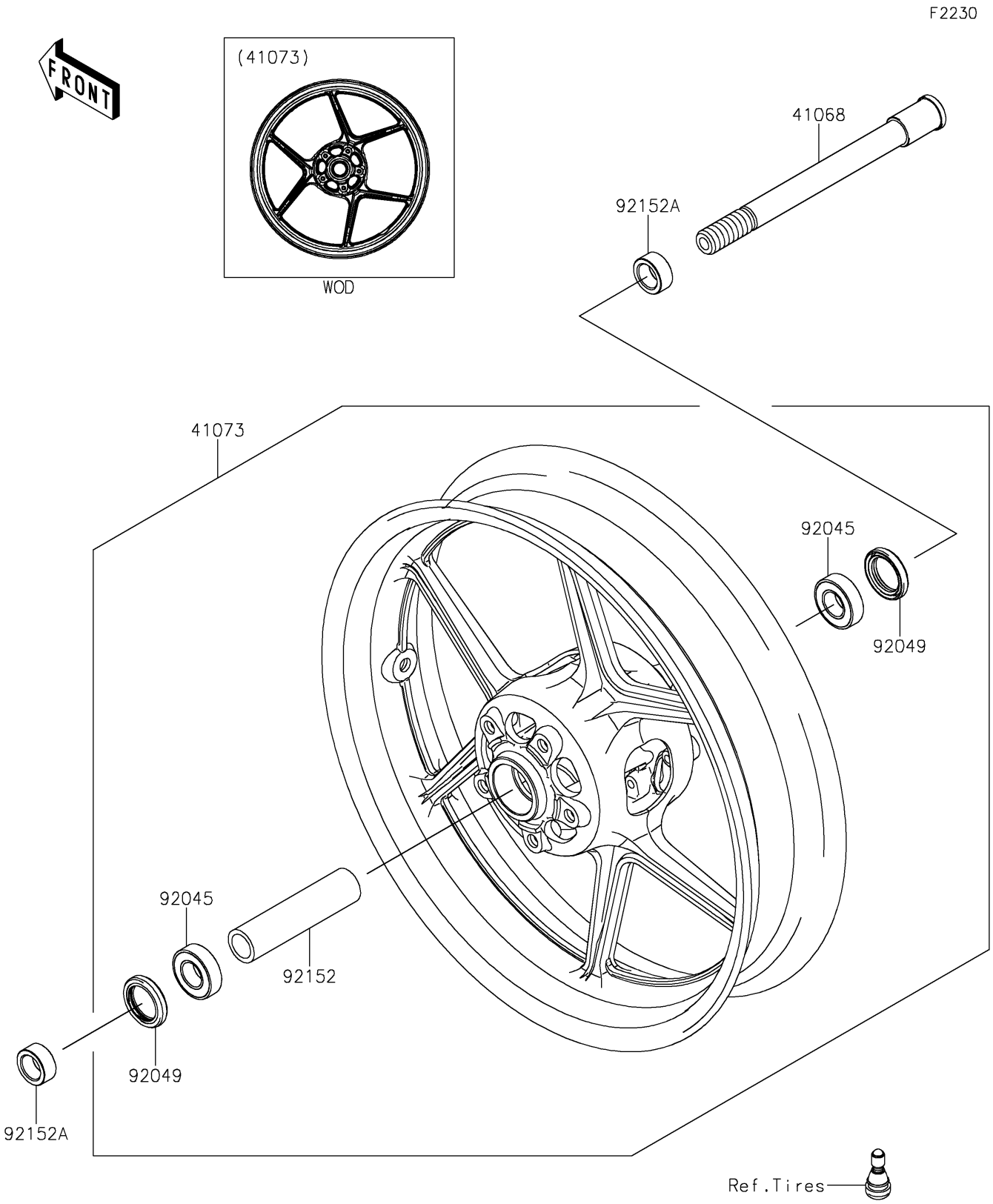

© 2026 Kawasaki Motors Corp., U.S.A.

2026 NINJA® 1100SX SE ABS

PARTS LIST

Front Wheel

ITEM NAME	PART NUMBER	QUANTITY
AXLE,FR,20X209 (Ref # 41068)	41068-0616	1
WHEEL-ASSY,FR,G.BLACK (Ref # 41073)	41073-0724-18F	1
BEARING-BALL,20X42X12 (Ref # 92045)	92045-0820	2
SEAL-OIL,BJN30427-C3 (Ref # 92049)	92049-1057	2
COLLAR,FR HUB,L=115 (Ref # 92152)	92152-0087	1
COLLAR,20X30X13 (Ref # 92152A)	92152-1739	2

© 2026 Kawasaki Motors Corp., U.S.A.