2025 NINJA® 1100SX SE ABS

PARTS DIAGRAM

Stand(s)

F2190

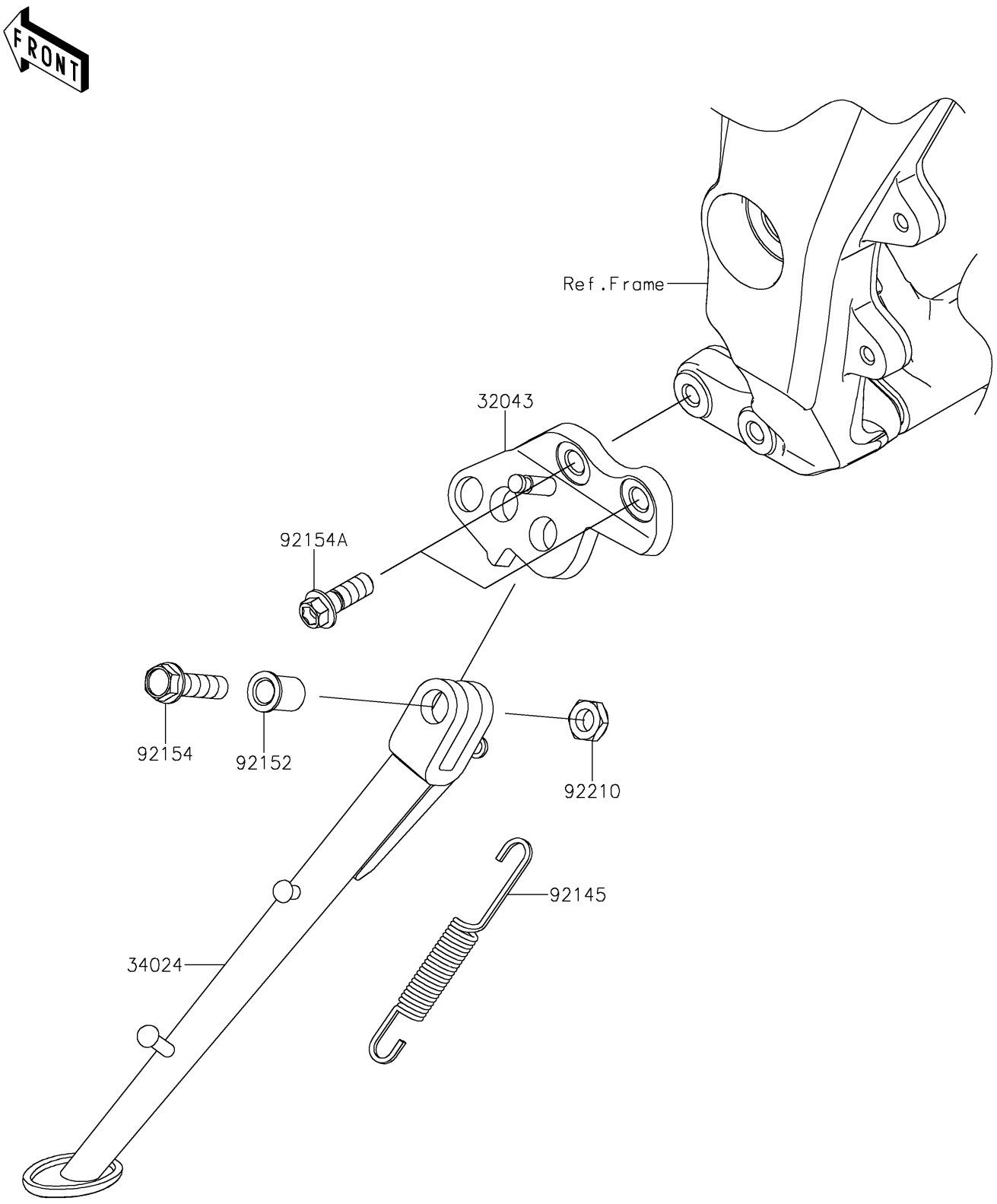

© 2026 Kawasaki Motors Corp., U.S.A.

2025 NINJA® 1100SX SE ABS

PARTS LIST

Stand(s)

ITEM NAME	PART NUMBER	QUANTITY
BRACKET-STAND,F.S.BLACK (Ref # 32043)	32043-0661-18R	1
STAND-SIDE,F.S.BLACK (Ref # 34024)	34024-0123-18R	1
SPRING,SIDE STAND (Ref # 92145)	92145-0562	1
COLLAR,10.2X15X20.1 (Ref # 92152)	92152-1828	1
BOLT,FLANGED,10X37 (Ref # 92154)	92154-2330	1
BOLT,FLANGED,10X28 (Ref # 92154A)	92154-4148	2
NUT,LOCK,10MM (Ref # 92210)	92210-0784	1

© 2026 Kawasaki Motors Corp., U.S.A.