2026 NINJA H2® SX SE ABS

PARTS DIAGRAM

Taillight(s)

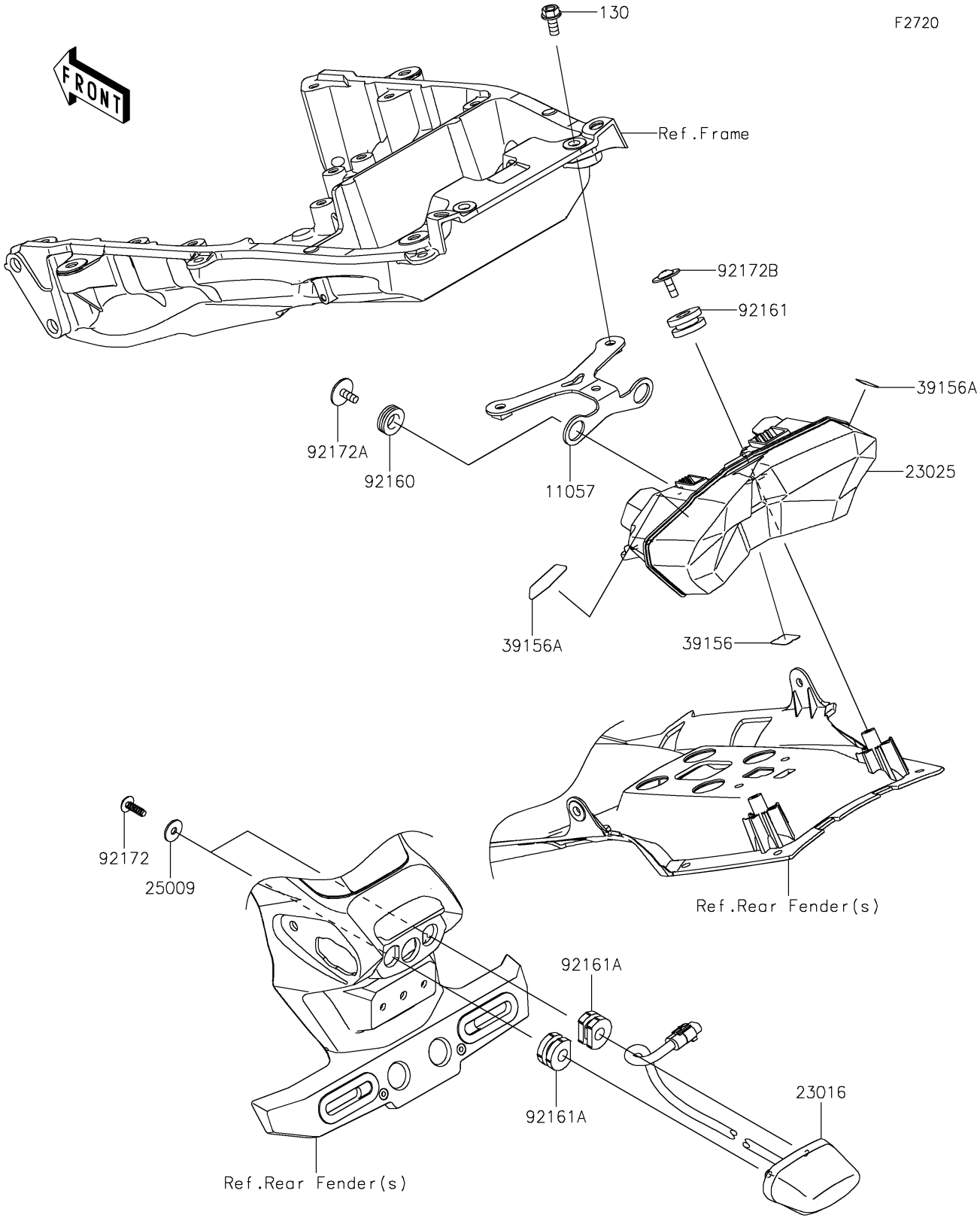

© 2026 Kawasaki Motors Corp., U.S.A.

2026 NINJA H2® SX SE ABS

PARTS LIST

Taillight(s)

ITEM NAME	PART NUMBER	QUANTITY
BRACKET (Ref # 11057)	11057-1299	1
LAMP-ASSY,LICENSE,LED (Ref # 23016)	23016-0666	1
LAMP-TAIL,LED (Ref # 23025)	23025-0387	1
WASHER,5.2X16X1.2 (Ref # 25009)	25009-004	2
PAD,17X15X0.2 (Ref # 39156)	39156-2231	1
PAD,10.6X36.8X0.2 (Ref # 39156A)	39156-2232	2
DAMPER (Ref # 92160)	92160-1278	2
DAMPER (Ref # 92161)	92161-0163	2
DAMPER (Ref # 92161A)	92161-0776	2
SCREW,TAPPING,5X16 (Ref # 92172)	92172-0238	2
SCREW,TAPPING,WP,5X14 (Ref # 92172A)	92172-0441	2
SCREW,TAPTITE,5X16 (Ref # 92172B)	92172-0481	2
BOLT-FLANGED,6X14 (Ref # 130)	130BC0614	2

© 2026 Kawasaki Motors Corp., U.S.A.