2025 Eliminator SE ABS

PARTS DIAGRAM

Throttle

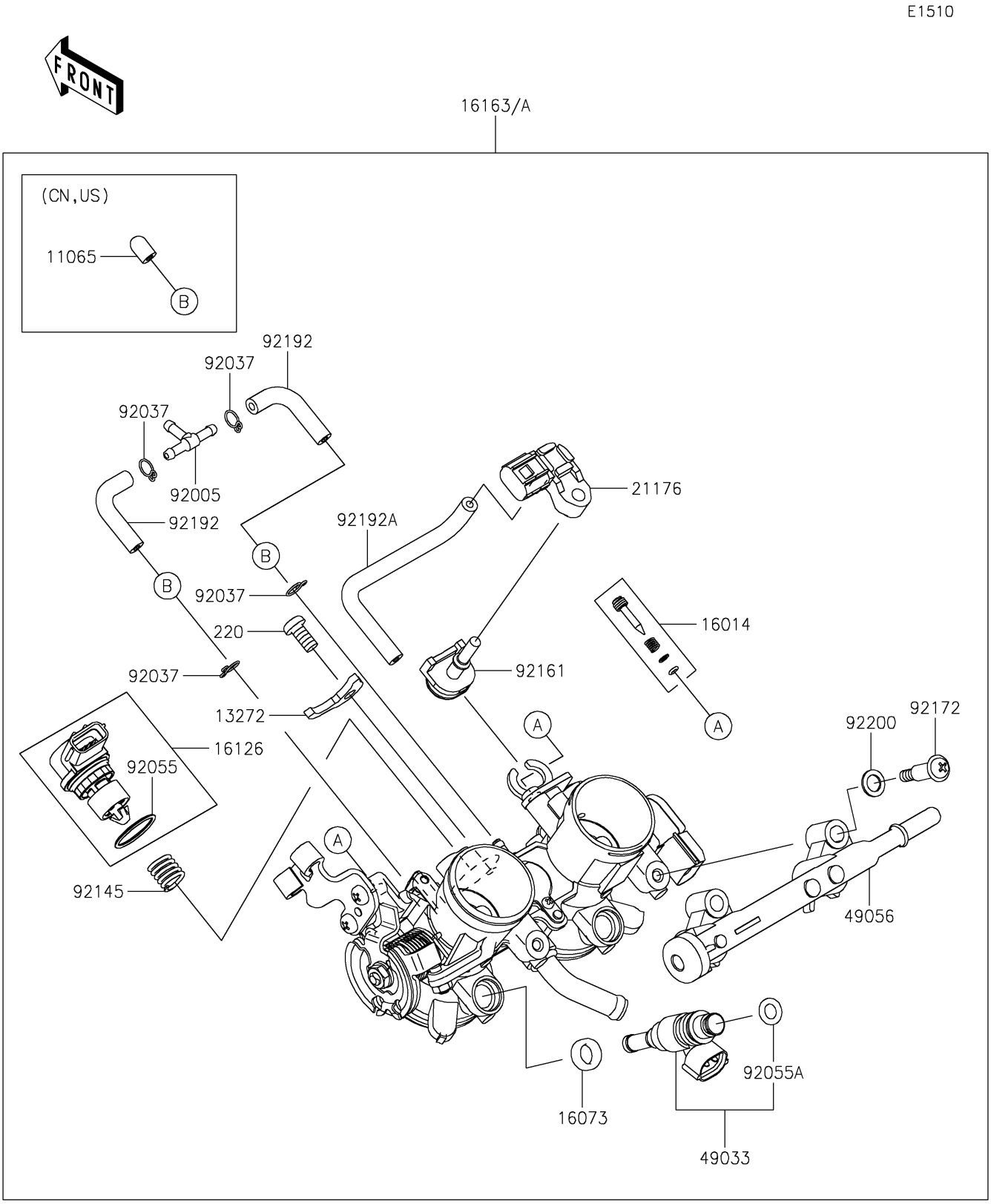

© 2026 Kawasaki Motors Corp., U.S.A.

2025 Eliminator SE ABS

PARTS LIST

Throttle

ITEM NAME	PART NUMBER	QUANTITY
PLATE (Ref # 13272)	13272-2558	1
SCREW-PILOT AIR (Ref # 16014)	16014-0022	2
INSULATOR (Ref # 16073)	16073-0866	2
VALVE,ISC (Ref # 16126)	16126-0748	1
THROTTLE-ASSY (Ref # 16163)	16163-1267	1
SENSOR,PRESSURE (Ref # 21176)	21176-0906	1
NOZZLE-INJECTION (Ref # 49033)	49033-0047	2
PIPE-INJECTION (Ref # 49056)	49056-0050	1
FITTING (Ref # 92005)	92005-1380	1
CLAMP,TUBE (Ref # 92037)	92037-1124	4
RING-O (Ref # 92055)	92055-0907	1
RING-O,REGULATOR-FUEL (Ref # 92055A)	92055-2187	2
SPRING (Ref # 92145)	92145-1826	1
DAMPER (Ref # 92161)	92161-2438	1
SCREW (Ref # 92172)	92172-1257	2
TUBE,3.5X7.5X55 (Ref # 92192)	92192-1349	2
TUBE (Ref # 92192A)	92192-1906	1
WASHER (Ref # 92200)	92200-3807	2
SCREW-PAN-CROS,6X12 (Ref # 220)	220AA0612	1

© 2026 Kawasaki Motors Corp., U.S.A.