# 2024 ELIMINATOR®

## PARTS DIAGRAM

### Balancer

Kawasaki
Let the Good Times Roll®

E1323

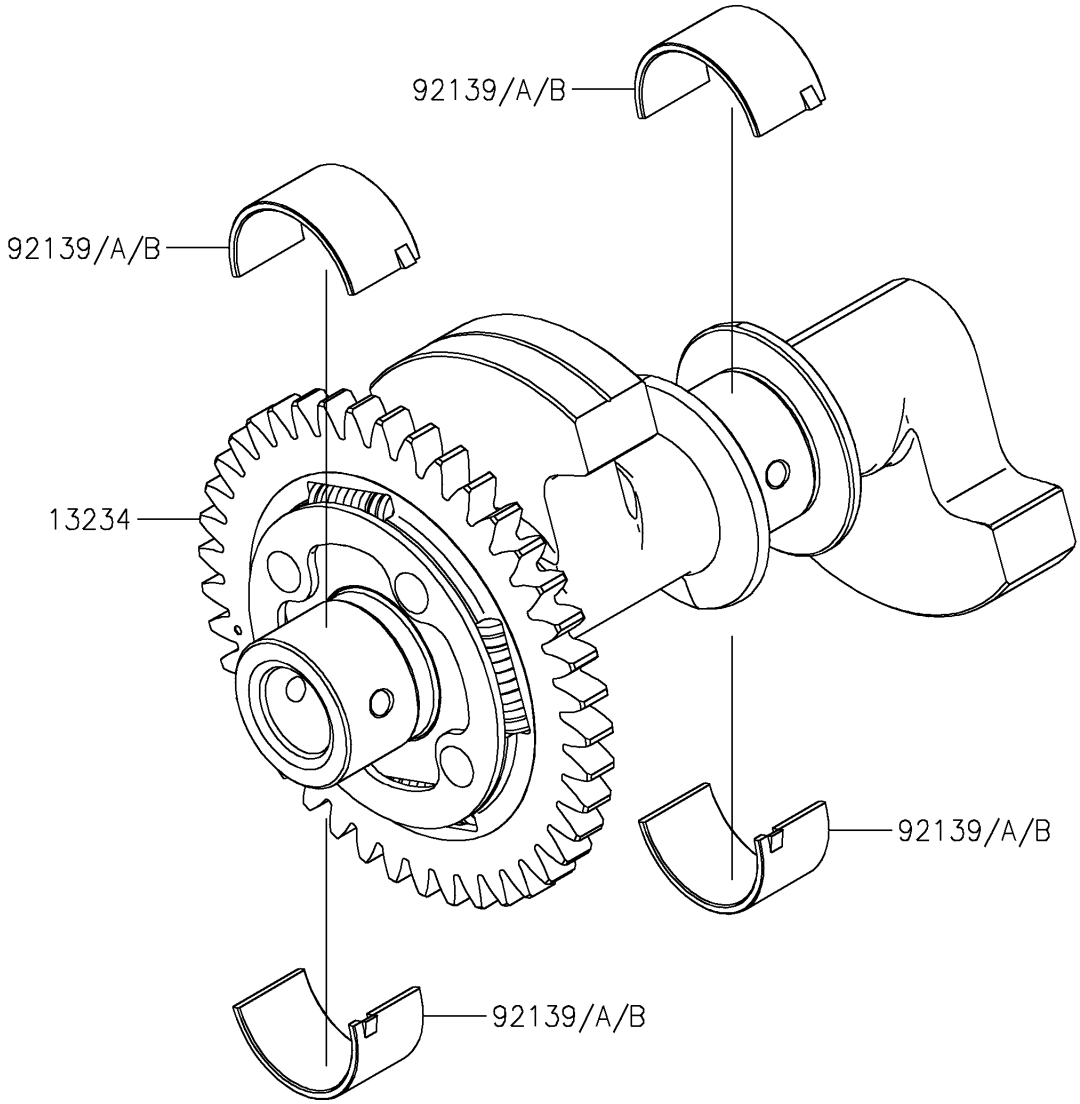


© 2026 Kawasaki Motors Corp., U.S.A.

# 2024 ELIMINATOR®

## PARTS LIST

### Balancer

| ITEM NAME | PART NUMBER | QUANTITY |
|---|---|---|
| SHAFT-COMP,BALANCER (Ref # 13234) | 13234-0627 | 1 |
| BUSHING,BALANCER,BLUE (Ref # 92139) | 92139-0883 | AR |
| BUSHING,BALANCER,BLACK (Ref # 92139A) | 92139-0884 | 4 |
| BUSHING,BALANCER,BROWN (Ref # 92139B) | 92139-0885 | AR |

© 2026 Kawasaki Motors Corp., U.S.A.