2026 Eliminator ABS

PARTS DIAGRAM

Decals(Khaki)(ASFNN/ASFNL)

F2861D

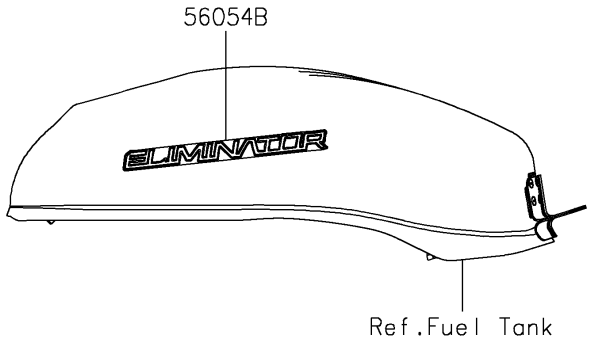

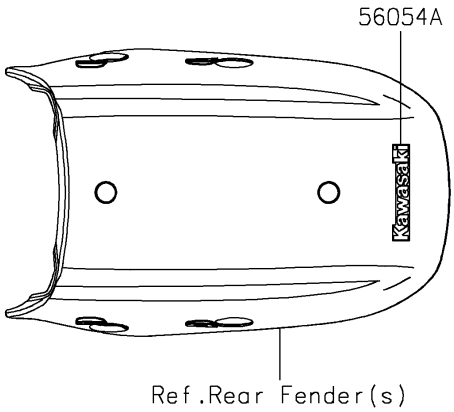

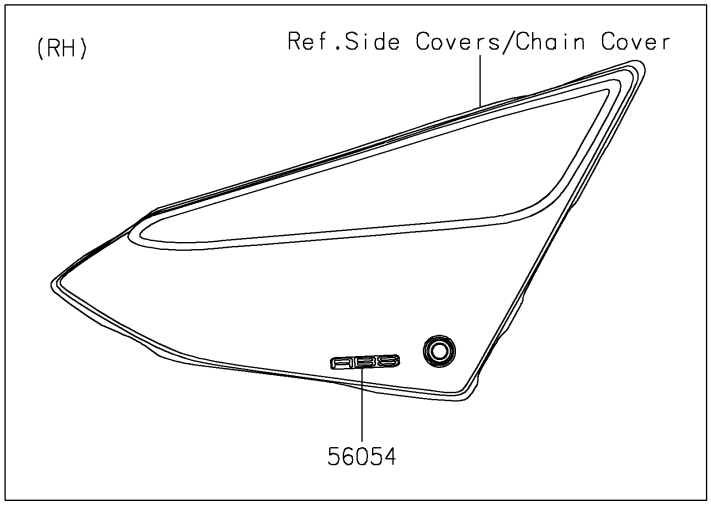

© 2026 Kawasaki Motors Corp., U.S.A.

2026 Eliminator ABS

PARTS LIST

Decals(Khaki)(ASFNN/ASFNL)

ITEM NAME	PART NUMBER	QUANTITY
MARK,ABS (Ref # 56054)	56054-1412	1
MARK,RR FENDER,KAWASAKI (Ref # 56054A)	56054-3973	1
MARK,FUEL TANK,ELIMINATOR (Ref # 56054B)	56054-4174	2

© 2026 Kawasaki Motors Corp., U.S.A.