2025 Ninja ZX-4R ABS

PARTS DIAGRAM

Turn Signals

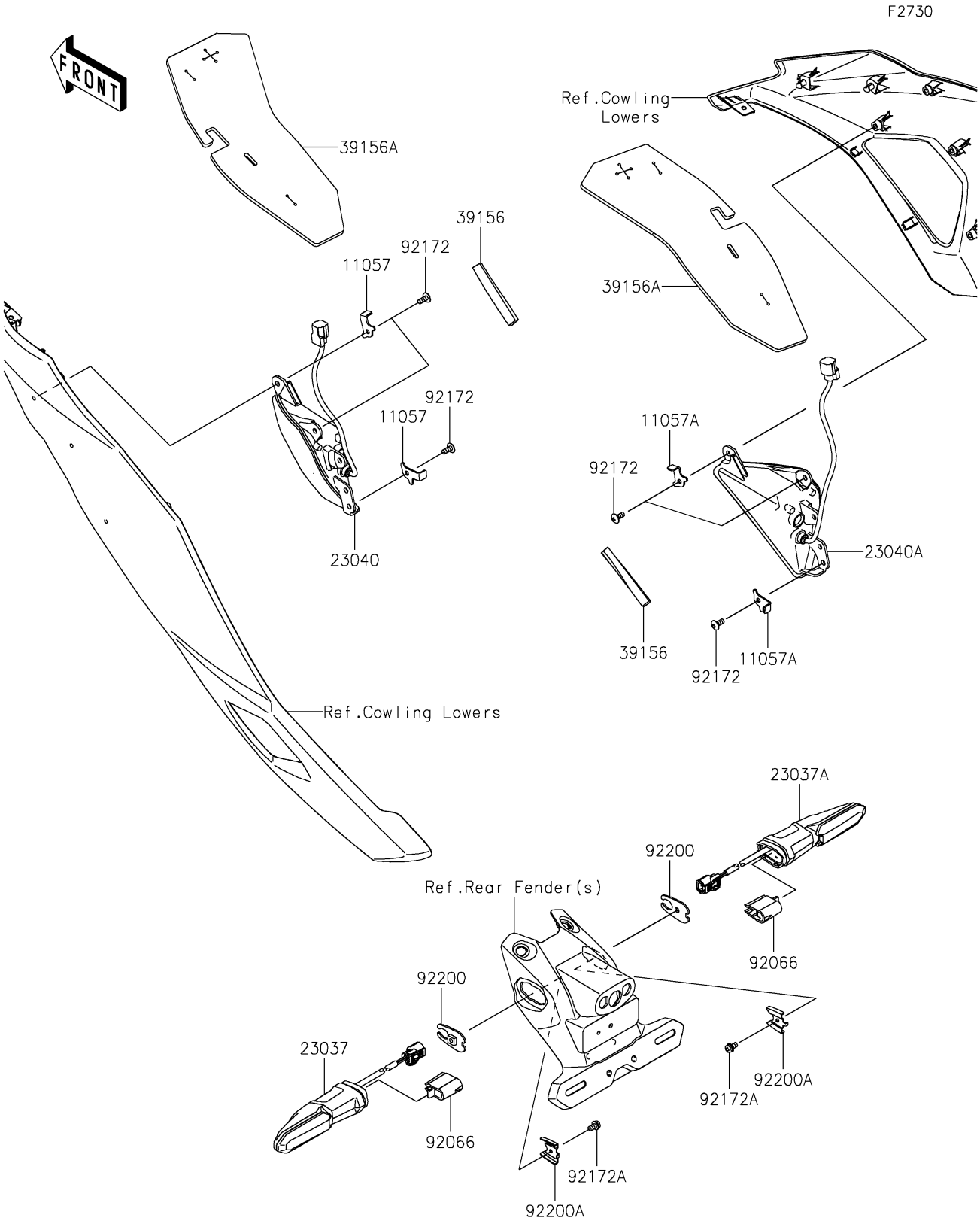

© 2026 Kawasaki Motors Corp., U.S.A.

2025 Ninja ZX-4R ABS

PARTS LIST

Turn Signals

ITEM NAME	PART NUMBER	QUANTITY
BRACKET,FR SIGNAL LAMP,LH (Ref # 11057)	11057-4176	2
BRACKET,FR SIGNAL LAMP,RH (Ref # 11057A)	11057-4177	2
LAMP-ASSY-SIGNAL,LED,RR,LH (Ref # 23037)	23037-0549	1
LAMP-ASSY-SIGNAL,LED,RR,RH (Ref # 23037A)	23037-0550	1
LAMP-SIGNAL,LED,FR,LH (Ref # 23040)	23040-0157	1
LAMP-SIGNAL,LED,FR,RH (Ref # 23040A)	23040-0158	1
PAD,10X80X10 (Ref # 39156)	39156-2381	2
PAD (Ref # 39156A)	39156-2776	2
PLUG,SIGNAL LAMP (Ref # 92066)	92066-0919	2
SCREW,5X12 (Ref # 92172)	92172-0821	6
SCREW-PAN-WP-CROS,4X8 (Ref # 92172A)	92172-1426	2
WASHER,SIGNAL LAMP (Ref # 92200)	92200-2294	2
WASHER (Ref # 92200A)	92200-2421	2

© 2026 Kawasaki Motors Corp., U.S.A.