2025 Ninja ZX-4R ABS

PARTS DIAGRAM

Rear Fender(s)

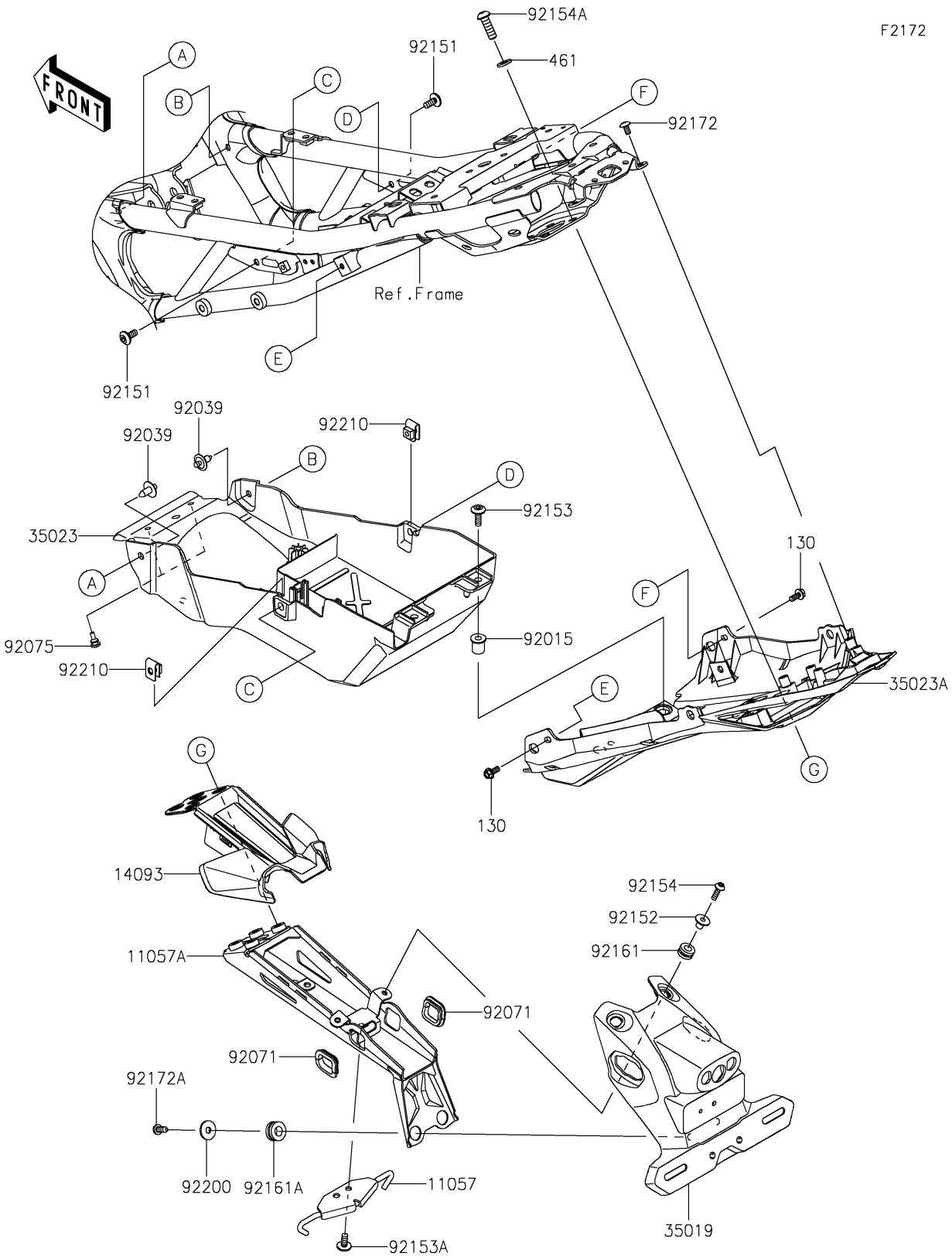

© 2026 Kawasaki Motors Corp., U.S.A.

2025 Ninja ZX-4R ABS

PARTS LIST

Rear Fender(s)

Kawasaki
Let the Good Times Roll®

ITEM NAME	PART NUMBER	QUANTITY
BRACKET,HOOK (Ref # 11057)	11057-2916	1
BRACKET,FLAP (Ref # 11057A)	11057-7472	1
COVER,FLAP (Ref # 14093)	14093-0960	1
FLAP (Ref # 35019)	35019-0670	1
FENDER-REAR,FR (Ref # 35023)	35023-0465	1
FENDER-REAR,RR (Ref # 35023A)	35023-0492	1
NUT (Ref # 92015)	92015-1700	2
RIVET (Ref # 92039)	92039-1289	2
GROMMET (Ref # 92071)	92071-0819	2
DAMPER,6X10X15 (Ref # 92075)	92075-1808	2
BOLT,SOCKET,6X14 (Ref # 92151)	92151-1654	2
COLLAR (Ref # 92152)	92152-2761	2
BOLT,6X18 (Ref # 92153)	92153-0816	2
BOLT,SOCKET,6X14 (Ref # 92153A)	92153-1361	2
BOLT,SOCKET,5X16 (Ref # 92154)	92154-1701	2
BOLT,SOCKET,8X25 (Ref # 92154A)	92154-4432	4
DAMPER (Ref # 92161)	92161-0056	2
DAMPER,10X20X8.8 (Ref # 92161A)	92161-1664	2
SCREW,5X12 (Ref # 92172)	92172-0821	2
SCREW,TAPPING,6X14 (Ref # 92172A)	92172-0856	2
WASHER,6.5X20X1.6 (Ref # 92200)	92200-1962	2
NUT,6MM (Ref # 92210)	92210-0218	2
BOLT-FLANGED,5X12 (Ref # 130)	130BB0512	2
WASHER-SPRING,8MM (Ref # 461)	461DA0800	4

© 2026 Kawasaki Motors Corp., U.S.A.