2026 Z H2 SE ABS

PARTS DIAGRAM

Accessory(Pillion Seat Cover)

F2910C

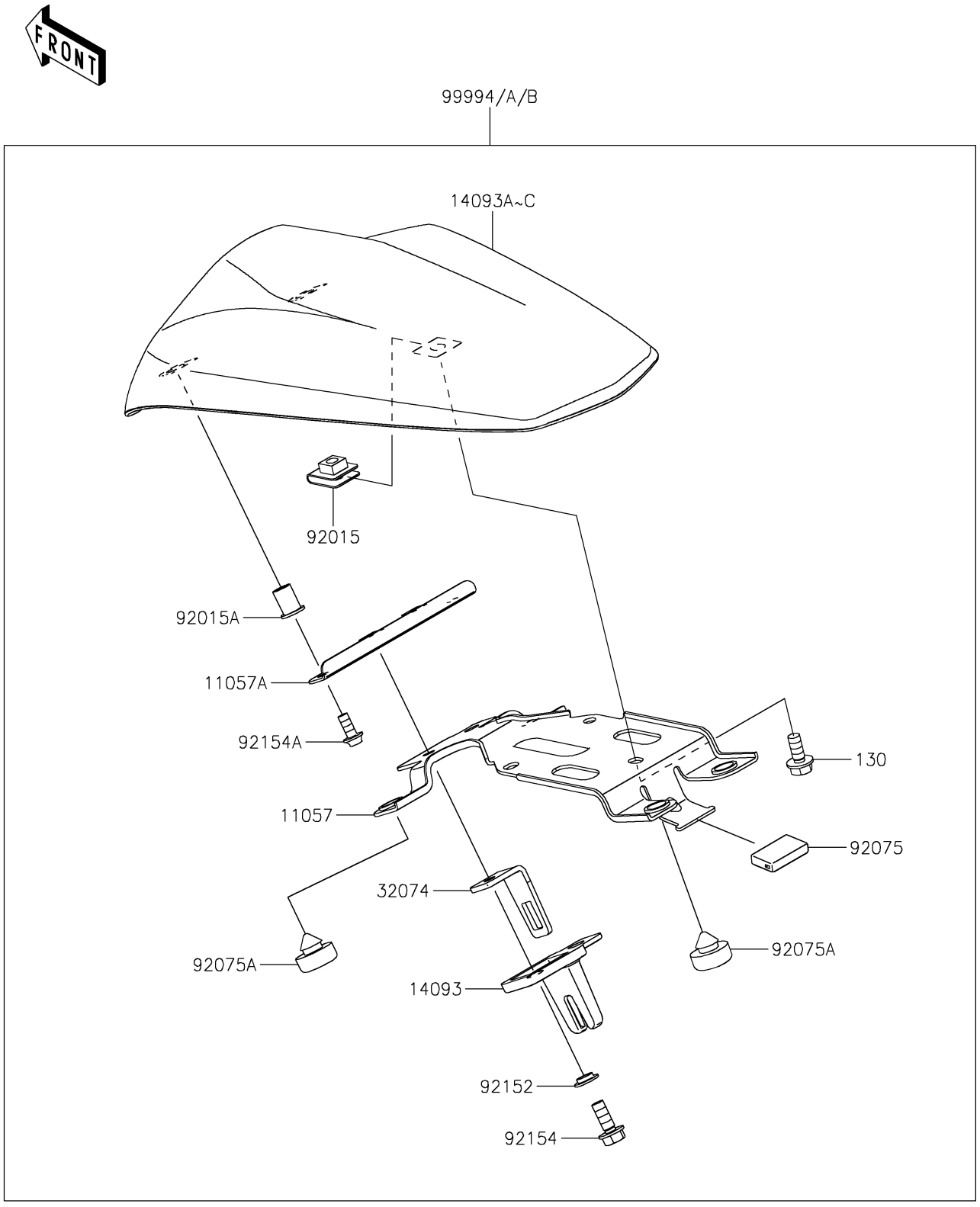

© 2026 Kawasaki Motors Corp., U.S.A.

2026 Z H2 SE ABS

PARTS LIST

Accessory(Pillion Seat Cover)

ITEM NAME	PART NUMBER	QUANTITY
BRACKET,MOUNT (Ref # 11057)	11057-0270	1
BRACKET (Ref # 11057A)	11057-2941	1
COVER (Ref # 14093)	14093-0515	1
COVER,PILLION SEAT,M.M.C.GRAY (Ref # 14093B)	14093-0974-51B	1
BRACKET-LOCK (Ref # 32074)	32074-0017	1
NUT,CLAMP,6MM (Ref # 92015)	92015-1531	1
NUT,WELL,5MM (Ref # 92015A)	92015-1757	2
DAMPER (Ref # 92075)	92075-1446	1
DAMPER,10X20X8 (Ref # 92075A)	92075-1927	4
COLLAR (Ref # 92152)	92152-0250	2
BOLT,FLANGED,6X16 (Ref # 92154)	92154-0899	2
BOLT,SOCKET,5X12 (Ref # 92154A)	92154-0917	2
PILLION SEAT COVER,M.M.C.GRAY (Ref # 99994A)	99994-1387-51B	1
BOLT-FLANGED,6X14 (Ref # 130)	130BA0614	1

© 2026 Kawasaki Motors Corp., U.S.A.