2023 Z H2 SE

PARTS DIAGRAM

Accessory(Slider)

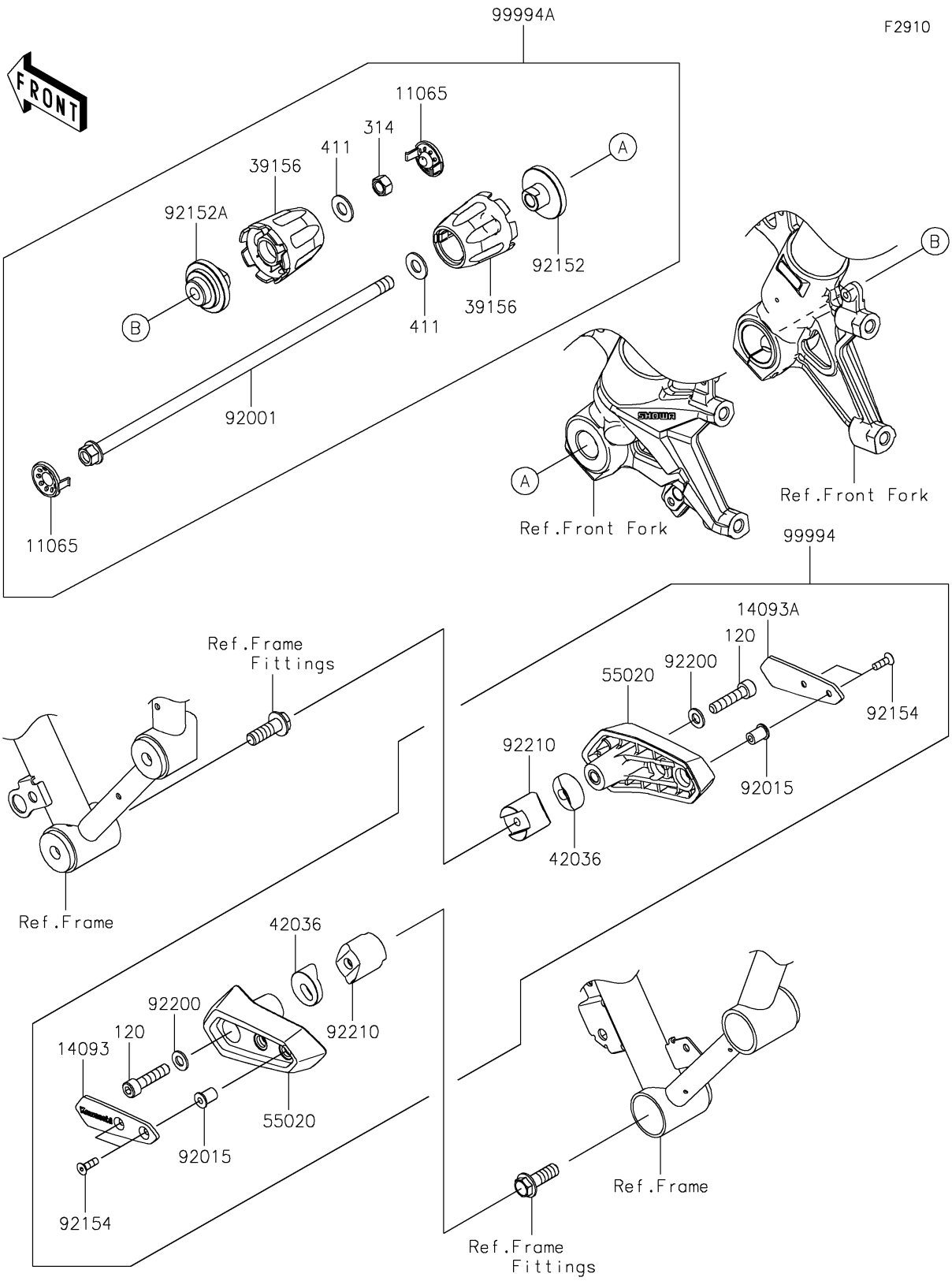

© 2026 Kawasaki Motors Corp., U.S.A.

2023 Z H2 SE

PARTS LIST

Accessory(Slider)

Kawasaki
Let the Good Times Roll®

ITEM NAME	PART NUMBER	QUANTITY
CAP,B.SILVER (Ref # 11065)	11065-1313-54N	2
COVER,SLIDER,LH (Ref # 14093)	14093-0350	1
COVER,SLIDER,RH (Ref # 14093A)	14093-0351	1
PAD,AXLE SLIDER (Ref # 39156)	39156-2212	2
SLEEVE (Ref # 42036)	42036-0848	2
GUARD (Ref # 55020)	55020-1997	2
BOLT,FLANGED,10X325 (Ref # 92001)	92001-1654	1
NUT,WELL,5MM (Ref # 92015)	92015-1757	4
COLLAR,LH (Ref # 92152)	92152-2647	1
COLLAR,RH (Ref # 92152A)	92152-2648	1
BOLT,SOCKET,5X16 (Ref # 92154)	92154-1014	4
WASHER,8.4X16X1.6 (Ref # 92200)	92200-0807	2
NUT (Ref # 92210)	92210-1751	2
FRAME SLIDER (Ref # 99994)	99994-1384	1
FRONT AXLE SLIDER (Ref # 99994A)	99994-1385	1
BOLT-SOCKET,8X35 (Ref # 120)	120CB0835	2
NUT-HEX-FINE,10MM (Ref # 314)	314BA1000	1
WASHER-PLAIN,10MM (Ref # 411)	411AA1000	2

© 2026 Kawasaki Motors Corp., U.S.A.